Cooper & Hunter

PRODUCT CATALOG

2023

HEAD OFFICE COOPER&HUNTER

MIAMI, FLORIDA

EIN ASSIGNED 47-3995007

3550 NW 113TH COURT

DORAL, FL 33178

WE SAVE THE PLANET

R32 FREON

PRODUCT LINE OF CLIMATE CONTROL EQUIPMENT | 2022

“COOPER AND HUNTER” SOCIAL RESPONSIBILITY PROJECT “WE SAVE THE PLANET” LAUNCHED

In the autumn of 2019, Cooper&Hunter, the global brand of air conditioning and heating equipment, announced the launch of the long-term project “We Save the Planet”. It will cover all areas where the sale of Cooper&Hunter HVAC equipment is carried out, including more than 45 countries.

By definition, corporate social responsibility is a voluntary contribution of a business to the social, economic and environmental sphere, which is directly related to the core business of the company. The company has decided to implement strategic and systematic support of environmental efforts, sports associations, and socially significant actions.”

I-ACTION TECHNOLOGY

The technology was developed by the leading specialists of the R&D COOPER & HUNTER department and successfully applied to inverter air conditioners. It is based on the principle of changing the speed of rotation of the motor rotor, which provides variable performance of the compressor.

Due to I-ACTION, the compressor uses only the performance that is necessary for efficient operation of the system. There are no permanent ON/OFF actions, as a result, the system operates without high starting currents and additional input power.

Efficient operation of the compressor at the lowest speed (1 Hz), make possible to get the highest level of energy saving level (to 40 W/h). System works normally even during voltage spikes in the network: from 96 to 265 V.

All mentioned features provide high-precision control of the air conditioner, maintaining a comfortable level of indoor climate, out of wide range of temperatures.

AUTO PROTECTION

The newest components of the air conditioner ensure the long-term operation of all elements of the air conditioning system and reacts rapidly to incorrect operation to avoid serious damage in emergency situations.

- Modern high-speed microprocessor provides smart control in any operation mode.
- Automatic voltage adaptation (96V-265V), guarantees protection against voltage spike and avoid possible voltage spikes. This ensures stable and reliable operation without system failure.

BLUE-FIN COATING

ODU heat exchanger has a special anti-corrosive coating BLUE-FIN, which guarantees the sustainability and reliability of outdoor unit.

ODU housing is protected by a galvanized steel plate and ceramic heat-resistant paint. This combination significantly extends the life cycle of outdoor unit.

WARM START

The indoor unit fan turns on when temperature is reached comfortable rate.

FUNCTION +8°C

The air conditioner will maintain a temperature on level of +8°C, this not allowing the room freezing while no one inside and saves the power consumption. Now you can leave your home without worrying that the room will freeze. This eliminates extra power consumption costs.

TWO-STAGE COMPRESSOR

Revolutionary technology provides operation at extremely low temperatures (up to -30C). For some models, cooling capacity increases by 50%, heating capacity by 30% compared to single-stage compressors.

Compressor consists of two cylinders. The first cylinder maintains a pre-pressure of refrigerant in the range of 0.3–0.4 MPa, the other circuit brings to the maximum pressure of refrigerant. Thus, a constant flow of refrigerant through the compressor is maintained, which ensures reliable operation of mechanical components and system economy.

This technology allows you to reduce the amount of refrigerant and use it more efficiently as a result, lowering the evaporator pressure level, saving energy costs to maintain the required pressure level in the system. It also guaranteed high efficiency level system at lowest external temperatures.

ATTENTION TO DETAILS

COOPER&HUNTER products are constantly improved by the company's leading engineers and designers. And thanks to constant marketing consumer analysis, the leading trends of the modern global air conditioning market are taken into account.

Quality transformed into details:

- innovative fans are improving the energy efficiency of the system, as a whole and increasing the air exchange of the heat exchanger;
- copper tubes in the heat exchanger have a special internal thread, which significantly increases the heat transfer area.

AUTORESTART

All parameters and configurations restored after sudden power loss.

SELF-DIAGNOSTICS

Malfunctions are indicated and shown as error code indication on the air conditioner display. So, the system prevents consequences and guarantees prevention of possible system errors.

SMART DEFROST

The system effectively activates the defrost process due to a combination of an in-built temperature sensor and reliable heating elements.

Due to this, the defrost interval is significantly reduced, as result, the defrost time is less, compared to classic type of defrosting.

That saves system costs and makes the defrosting process comfortable and insensible.

SMART SENSOR

Airflow distribution algorithm controlled by a built-in presence sensor:

- Follow – when moving the user, the air flow follows him.
- Avoid – cooled air envelops the user, preventing the effect of draft.
- Surround – 3D air flow, that imitates fresh breeze.
- Energy-saving – when the room is empty, the air conditioner will go into energy-saving mode, which saves up to 30% of electricity.

BMS

Allows you to integrate air conditioning into the Smart Home system. Central control of all engineering systems from one computer.

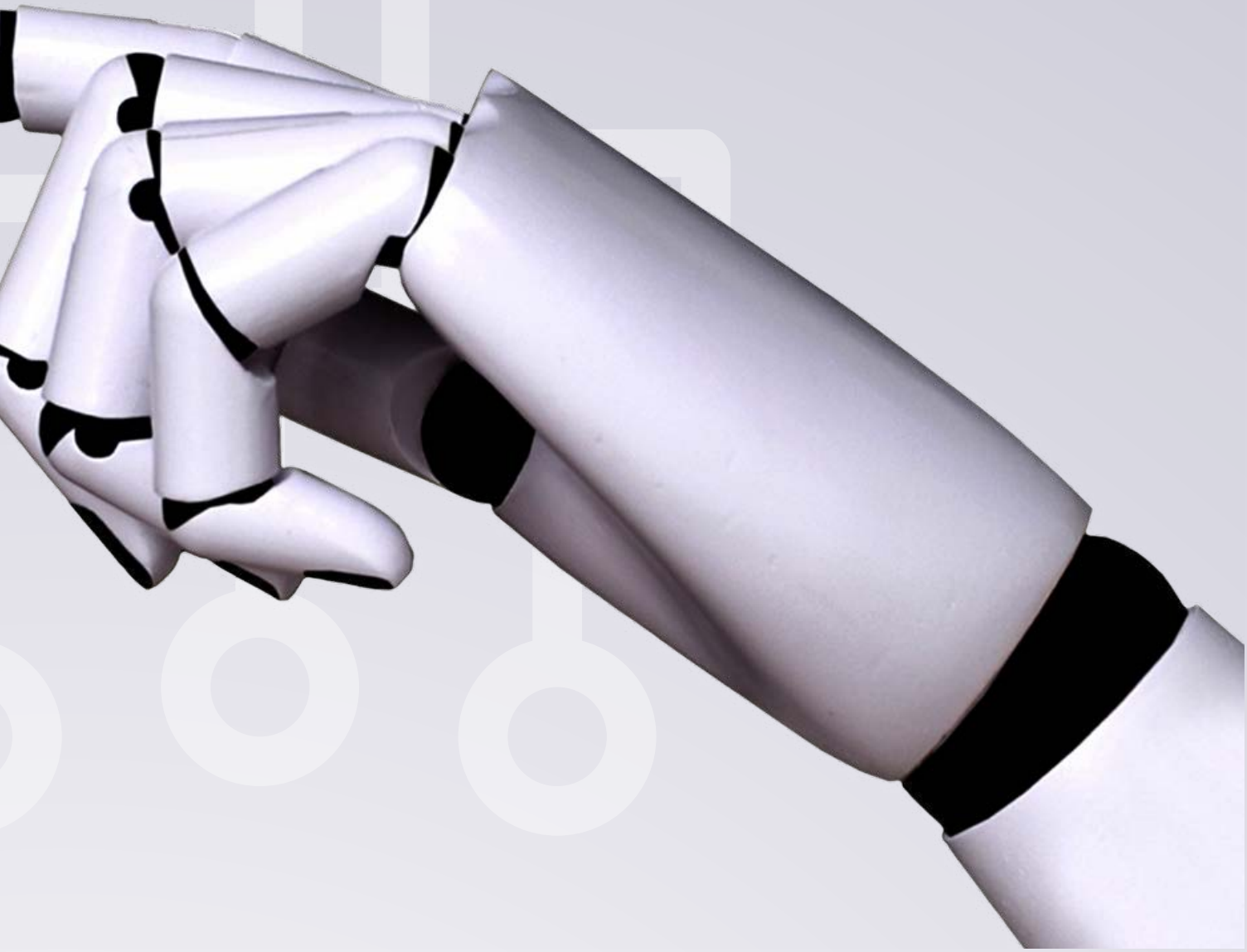

7-SKY TECHNOLOGY

The unique technology of total air purification completely purified the air in your house.

The filtration system consists of different types of filters that effectively neutralize various indoor pests.

ARGENTUM ION – silver ion coating is effective in neutralizing of variety types of bacteria, viruses and fungi, cleans the air and makes the indoor air more safely.

ACARO-CLEAN – designed to neutralize dust mites and prevents their of dust mites.

CATECHIN PROTECT – blocks the growth of viruses and bacteria, including such as staphylococcus, streptococcus, and others. Catechin is a natural antiseptic found in green tea leaves.

CHITIN PROTECT – a filter component of which is the substance chitosan, due to the natural properties of which a significant number of viruses are neutralized. Chitosan is part of the outer skeleton of crabs and crayfish. Scientists have learned to make a "molecular network" of chitosan that can neutralize a large number of viruses. In addition, chitosan has antibacterial properties, so chitosan is effective not only in combating viruses but also bacteria.

STOP FORMALDEHYDE – formaldehyde, is a harmful gaseous compound that can cause cancer. COOPER&HUNTER specialists have successfully developed a filter that effectively fights formaldehyde impurities in the air.

SUPER VITAMIN C – a filter flavored with the essence of substances that have vitamin C in their composition. This filter successfully overcomes foreign odors and saturates the air with nutrients.

ECO FRESH – due to the electrostatic properties of this filter, polarization is formed on the surface of the filter, which allows the accumulation of dust and small particles contained in the air.

DOUBLE SELF-CLEAN

Innovative DOUBLE SELF-CLEAN technology avoids air conditioner from dust, fungi, viruses and bacteria.

How it works:

1. Rapid freezing of the heat exchanger stop the spread of harmful particles on the indoor unit heat exchanger surface.
2. Extreme overheating of the heat exchanger surface up to + 57 ... + 58°C after freezing neutralize all fungi, bacteria and viruses.
3. The air conditioner is completely cleaned in 30 minutes.

This saves time and money on maintenance, and allows you to get healthy air

SELF-CLEANING (X-FAN)

When air conditioner stopped, the fan still works in order to dry the air conditioner and avoid extra moisture, fungus and corrosion.

STOP DUST

The upper grille of the air conditioner closes with a special blind when you turn off the air conditioner. This prevents dust from accumulating on the evaporator unit

CH SMART-ION FILTER

Ionizers such as CH SMART-iON Filter have successfully proven themselves as high-quality ionizing elements of COOPER&HUNTER air conditioners.

By using an ionizer, the air in the house gets rid of foreign odors and the effect of frosty freshness appears and a significant amount of harmful microbes in your room disappears.

SLEEP MODE

There are four intelligent night modes for comfortable sleep.

- Deep sleep – the set of temperature will be close to optimal for sleep. The mode will be regulated according to human biorhythms.
- Easy awakening – before you wake up, the set temperature will automatically drop or rise to refresh you in the morning.
- Siesta – this mode allows you to automatically adjust the set temperature according to the characteristics of a healthy afternoon sleep, providing optimal conditions for comfortable and healthy rest.
- Personal adjustment – set the temperature trend and sleep time, on your mind.

I FEEL

The function controls air temperature, by means of the sensor in the remote control. This sensor measures the temperature at the location of the remote control and transmits information to the indoor unit. This feature allows you to achieve the required parameters directly in the place where the control panel is located.

STEPLESS FAN CONTROL

Unique technology of stepless control of the indoor unit fan in a wide range from 1 to 100%

TURBO MODE

Quick cooling or heating.

Depending on the mode of operation, cool or warm air flow reaches all corners of the room, providing comfort throughout the room in a short period of time.

SWING MODE

Control of the direction of air distribution due to wide-angle horizontal and vertical louvers and allows you to create a three-dimensional air flow with a large coverage area.

AUTO-LIGHT

The light sensor determines the level of illumination of the room, while reducing or increasing the signal level and brightness of the display on the indoor unit.

MULTI-SPEED FAN

Allows you to adjust the airflow according to your needs and prevents cold air currents.

TIMER

Due to timer functions, you can schedule the air conditioner ON/OFF functions at the desired time.

LOCKING THE REMOTE CONTROL

The function restricts unwanted access to the air conditioner settings.

DRY MODE

A separate mode of operation of the system that controls excessive humidity in your home, preventing the formation of mold on the walls.

WIFI

Air conditioning control function from anywhere in the world. With this feature, you can remotely maintain the desired temperature in your home at any time of year.

VARIETY
OF COLORS

Cooper&Hunter

SERIES

SUPREME

Supreme series air conditioners use environmentally friendly R32 refrigerant. Wide working range of temperatures from -30°C to + 54°C, which allows you to use conditioners all year round. Modern, elegant design, a wide variety of colors making a perfect match for any interior.

SUPREME SERIES

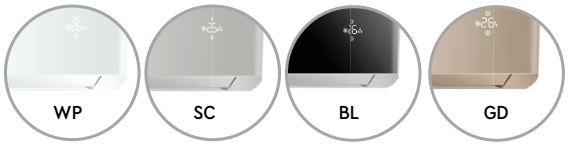

5 YEARS | +54°C | -30°C | 18dB | 4

CE RoHS EAC INVERTER

FUNCTION

Health	Comfort management

SLEEP mode · CH 7-SK technology · ECO-FRESH · CH SMART-ION Filter · Self-clean · Locking the remote control · Timer · LED display · Turbo mode · Multi speed fan · SWING mode · Dry mode · Wi-Fi · I FEEL

Intelligent control	Technological	Energy efficiency

Anti Freeze protection · Auto restart · Self diagnostics · Display backlight · Wired controller connection · R32 Refrigerant · Silent mide · Auto protection · +8°C · I-Action Technology · BLUE-FIN · Two-Stage Compressor · Warm start · Energy Efficiency · Generation 6

CONTROLS AND ACCESSORIES (OPTIONAL)

Wired Controller XK76

Wired Controller CE50-24/E

Wired Controller CE52-24/F

MODEL			CH-S09FTXAM2S-GD CH-S09FTXAM2S-WP CH-S09FTXAM2S-SC CH-S09FTXAM2S-BL	CH-S12FTXAM2S-GD CH-S12FTXAM2S-WP CH-S12FTXAM2S-SC CH-S12FTXAM2S-BL	CH-S18FTXAM2S-GD CH-S18FTXAM2S-WP CH-S18FTXAM2S-SC CH-S18FTXAM2S-BL	CH-S24FTXAM2S-GD CH-S24FTXAM2S-WP CH-S24FTXAM2S-SC CH-S24FTXAM2S-BL
Capacity	Cooling	kW	2.70 (0.70-5.00)	3.53 (0.85-5.00)	5.30 (1.20-7.20)	7.03 (2.00-9.00)
	Heating	kW	3.50 (0.70-5.50)	4.20 (0.88-7.20)	5.57 (1.20-9.20)	7,.03 (2.00-9.50)
Power consumption	Cooling	kW	0.55 (0.08-1.80)	0.84 (0.06-1.90)	1.32 (0.35-2.50)	1.85 (0.45-3.70)
	Heating	kW	0.75 (0.13-2.40)	0.95 (0.13-2.60)	1.32 (0.35-3.30)	1.75 (0.38-3.80)
Energy efficiency	Cooling (SEER*)	kW/kW	8.5 (A+++)	8.5 (A+++)	7.5 (A++)	6.5 (A++)
	Heating (SCOP**)	kW/kW	5.7 (A+++)	5.7 (A+++)	5.1 (A+++)	5.3 (A+++)
INDOOR UNIT						
Power supply			~220-240V/50Hz/1 Ph			
Air productivity		m^3/h	430/500/560/620/670/720/800	450/530/580/630/680/730/800	600/800/850/900/1000/1100/1150/1200	650/750/800/850/950/1100/1250
Sound pressure level		dB (A)	18/22/26/30/34/38/43	20/24/28/32/36/41/46	30/33/36/39/42/45/48	32/35/38/41/44/47/50
Drainage		l/h	0.8	1.4	1.8	2.0
Weight		kg	13	13.5	16.5	16.5
OUTDOOR UNIT						
Sound pressure level		dB (A)	53	54	56	58
Compressor type			Rotary			
Refrigerant type			R32			
Temperature range for cooling		°C	-18 ... +54			
Temperature range for heating		°C	-30 ... +24			
Weight		kg	44.5	45.5	62.5	65
Gas filling volume		kg	1.0	1.0	1.5	2.0
Liquid line diameter		mm/inch	6.38/1/4	.38/1/4"	6.38/1/4"	6.38/1/4"
Gas pipeline diameter		mm/inch	9.53/3/8"	9.53/3/8"	15.88/5/8"	15.88/5/8"
Maximum height difference		m	10	10	20	30
Maximum track length		m	15	20	40	50

* SEER – seasonal coefficient of system cooling capacity.
** SCOP – seasonal coefficient of system cooling capacity.

INDOOR UNIT

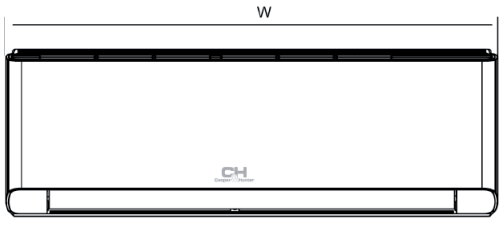

MODEL	W (mm)	H (mm)	D (mm)
CH-S09FTXAM2S-GD/WP/SC/BL	996	301	225
CH-S12FTXAM2S-GD/WP/SC/BL	996	301	225
CH-S18FTXAM2S-GD/WP/SC/BL	1101	327	249
CH-S24FTXAM2S-GD/WP/SC/BL	1101	327	249

OUTDOOR UNIT

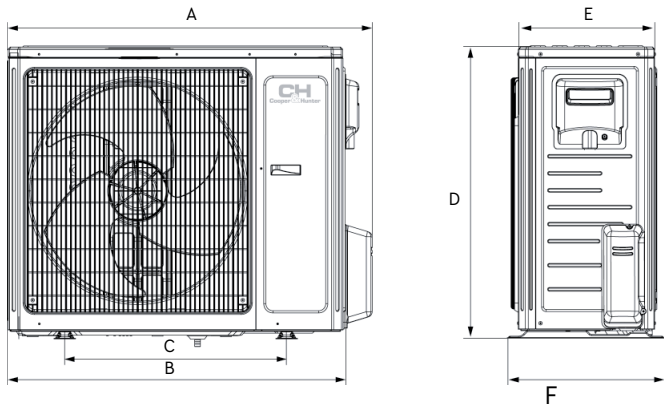

MODEL	A (mm)	B (mm)	C (mm)	D (mm)	E (mm)	F (mm)
CH-S09FTXAM2S-GD/WP/SC/BL	899	838	550	596	303	378
CH-S12FTXAM2S-GD/WP/SC/BL	899	838	550	596	303	378
CH-S18FTXAM2S-GD/WP/SC/BL	1000	920	610	790	370	427
CH-S24FTXAM2S-GD/WP/SC/BL	1000	920	610	790	370	427

INNOVATIONS AND TECHNOLOGIES

Cooper & Hunter

SERIES

VIP INVERTER NG

Updated air conditioner VIP Inverter NG for the most severe cold. Innovative technology 'TWO-stege Compressor' provides efficient operation in the temperature range from -30°C to +24°C for heating and from -18°C to +54°C for cooling. The air flow is distributed over the entire area of the room. The new VIP Inverter NG with eco-freon R32 works reliably at any temperature and doesn't harm the planet.w

VIP INVERTER NG SERIES

5 YEARS | +54°C | -30°C | 18dB | INVERTER

CE RoHS EAC

FUNCTION

Health	Comfort management												
SLEEP mode	CH 7-SK technology	ECO-FRESH	CH SMART-ION Filter	Self-clean	Locking the remote control	Timer	LED display	Turbo mode	Multi speed fan	SWING mode	Dry mode	Wi-Fi	I FEEL

Intelligent control					Technological								Energy efficiency	
Anti Freeze protection	Auto restart	Self diagnostics	Display backlight	Wired controller connection	R32 Refrigerant	Silent mide	Auto protection	+8°C	I-Action Technology	BLUE-FIN	Two-Stage Compressor	Warm start	Energy Efficiency	Generation 5

CONTROLS AND ACCESSORIES (OPTIONAL)

Wired Controller XK76

Wired Controller CE50-24/E

Wired Controller CE52-24/F

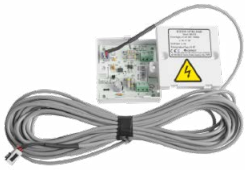

Detection Control Board MK010

MODEL			CH-S09FTXHV-B-NG	CH-S12FTXHV-B-NG	CH-S18FTXHV-B-NG
Capacity	Cooling	kW	2.70 (0.30–4.30)	3.53 (0.30–4.80)	5.30 (1.20–6.50)
	Heating	kW	3.20 (0.60–5.90)	4.00 (0.60–6.00)	5.30 (1.30–7.00)
Power consumption	Cooling	kW	0.60 (0.13–1.30)	0.88 (0.13–1.80)	1.45 (0.24–2.30)
	Heating	kW	0.78 (0.15–2.30)	1.00 (0.15–2.40)	1.42 (0.24–2.50)
Energy efficiency	Cooling (SEER*)	kW/kW	7.5 (A++)	7.2 (A++)	6.8 (A++)
	Heating (SCOP**)	kW/kW	5.7 (A+++)	5.5 (A+++)	5.1 (A+++)
INDOOR UNIT					
Power supply			~220-240V/50Hz/1 Ph		
Air productivity		m^3/h	220/250/290/330/390/450/550	220/250/330/400/450/500/650	340/400/500/600/650/750/850
Sound pressure level		dB (A)	18/21/24/28/32/34/36	19/22/25/29/31/34/37	22/24/28/32/34/38/43
Drainage		l/h	0.8	1.4	1.8
Weight		kg	11.5	11.5	14
OUTDOOR UNIT					
Sound pressure level		dB (A)	52	53	57
Compressor type			Rotary		
Refrigerant type			R32		
Temperature range for cooling		°C	-18/+54		
Temperature range for heating		°C	-30/+24		
Weight		kg	42	43.5	50.5
Gas filling volume		kg	0.95	0.9	1.4
Liquid line diameter		mm/inch	6.38/1/4''	6.38/1/4''	6.38/1/4''
Gas pipeline diameter		mm/inch	9.53/3/8''	9.53/3/8''	12.7/1/2''
Maximum height difference		m	10	10	10
Maximum track length		m	15	20	25

* SEER – seasonal coefficient of system cooling capacity.
** SCOP – seasonal coefficient of system cooling capacity.

INDOOR UNIT

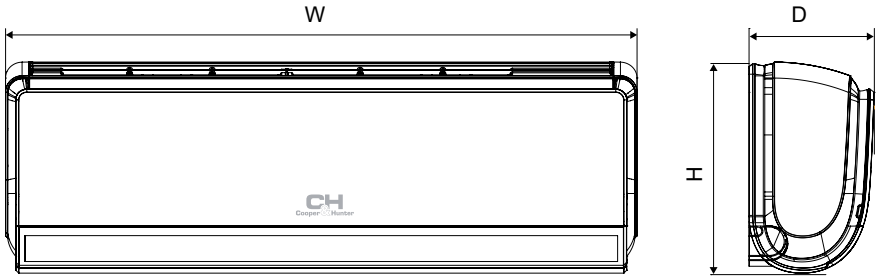

MODEL	W (mm)	H (mm)	D (mm)
CH-S09FTXHV-B-NG	860	305	170
CH-S12FTXHV-B-NG	860	305	170
CH-S18FTXHV-B-NG	960	320	205

OUTDOOR UNIT

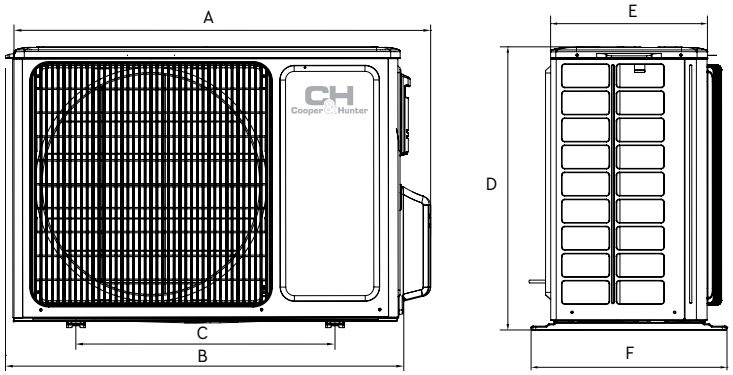

MODEL	A (mm)	B (mm)	C (mm)	D (mm)	E (mm)	F (mm)
CH-S09FTXHV-B-NG	899	810	490	596	303	378
CH-S12FTXHV-B-NG	899	810	490	596	303	378
CH-S18FTXHV-B-NG	950	892	560	700	341	396

RELIABILITY AND ENERGY EFFICIENCY

Cooper & Hunter

SERIES

ICY III

For years ICY III has been proving its reliability and manufacturability. The highest class of energy efficiency. provides the opportunity to save as much as possible on accounts. The air conditioner has a new generation of total air purification technology - 'CH SMART-ION FILTER'. The air conditioner will maintain a temperature of + 8°C and protect your home from freezing.

ICYIII SERIES

5 YEARS | +52°C | -30°C | 18dB | INVERTER

CE RoHS EAC

FUNCTION

Health

- SLEEP mode
- CH 7-SK technology
- ECO-FRESH
- CH SMART-ION Filter
- Self-clean

Comfort management

- Locking the remote control
- Timer
- LED display
- Turbo mode
- Multi speed fan
- SWING mode
- Dry mode
- Wi-Fi
- I FEEL

Intelligent control

- Anti Freeze protection
- Auto restart
- Self diagnostics
- Display backlight
- Wired controller connection

Technological

- R32 Refrigerant
- Silent mide
- Auto protection
- +8°C
- I-Action Technology
- BLUE-FIN
- Two-Stage Compressor
- Warm start

Energy efficiency

- Energy Efficiency
- Generation 5

CONTROLS AND ACCESSORIES (OPTIONAL)

Wired Controller XK76

Wired Controller CE50-24/E

Wired Controller CE52-24/F

MODEL			CH-S09FTXTB2S-NG	CH-S12FTXTB2S-NG	CH-S18FTXTB2S-NG	CH-S24FTXTB2S-NG
Capacity	Cooling	kW	2.70 (0.76–4.81)	3.53 (0.74–4.73)	5.30 (1.00–6.30)	7.03 (2.00–8.60)
	Heating	kW	3.50 (0.82–5.50)	4.20 (0.83–6.33)	5.57(1.00–7.14)	7.03 (1.90–9.00)
Power consumption	Cooling	kW	0.55 (0.08–1.80)	0.84 (0.06–1.90)	1.18 (0.35–2.50)	1.85 (0.45–3.70)
	Heating	kW	0.75 (0.13–2.40)	0.95 (0.13–2.60)	1.45 (0.35–3.30)	1.75 (0.38–3.80)
Energy efficiency	Cooling (SEER*)	kW/kW	8.5 (A+++)	8.5 (A+++)	6.6 (A++)	6.5 (A++)
	Heating (SCOP**)	kW/kW	5.7 (A+++)	5.7 (A+++)	5.1 (A+++)	5.3 (A+++)
INDOOR UNIT						
Power supply			~220–240V/50Hz/1 Ph			
Air productivity		m^3/h	450/500/560/620/570/720/ 800	430/530/580/630/680/730/800	500/600/780/850/950/1050/1150/1200	550/750/800/850/900/950/1050/1200
Sound pressure level		dB (A)	18/22/26/30/34/36/43	19/23/27/31/34/36/44	25/30/33/35/37/40/44	27/32/36/39/41/43/46
Drainage		l/h	0.8	1.4	1.8	2
Weight		kg	13	13.5	16.5	16.5
OUTDOOR UNIT						
Sound pressure level		dB (A)	53	54	56	58
Compressor type			Rotary			
Refrigerant type			R32			
Temperature range for cooling		°C	-18/+52			
Temperature range for heating		°C	-30/+24			
Weight		kg	44.5	45.5	62.5	65
Gas filling volume		kg	1	1	1.5	2
Liquid line diameter		mm/inch	6.38/1/4"	6.38/1/4"	6.38/1/4"	6.38/1/4"
Gas pipeline diameter		mm/inch	9.53/3/8"	9.53/3/8"	15.88/5/8"	15.88/5/8"
Maximum height difference		m	10	10	20	30
Maximum track length		m	15	20	40	50

* SEER – seasonal coefficient of system cooling capacity.
** SCOP – seasonal coefficient of system cooling capacity.

INDOOR UNIT

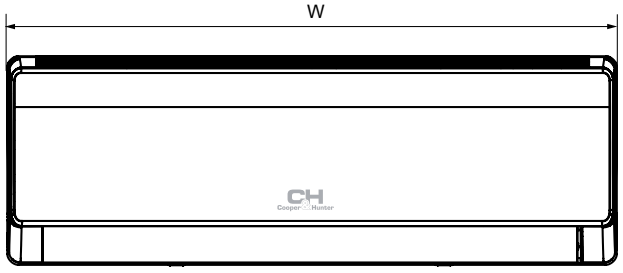

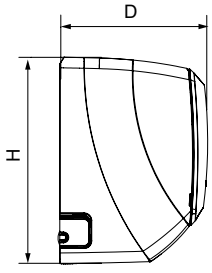

MODEL	W (mm)	H (mm)	D (mm)
CH-S09FTXTB2S-NG	996	301	225
CH-S12FTXTB2S-NG	996	301	225
CH-S18FTXTB2S-NG	1101	327	249
CH-S24FTXTB2S-NG	1101	327	249

OUTDOOR UNIT

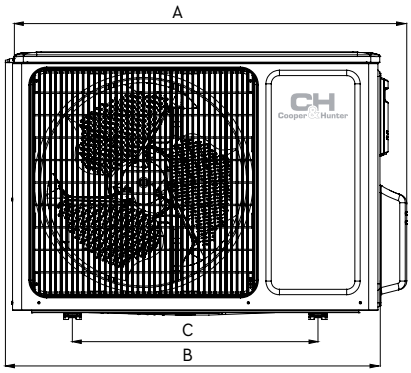

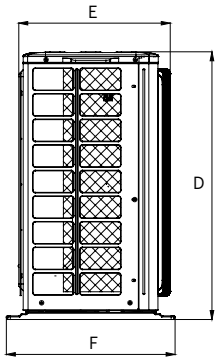

МОДЕЛЬ	A (mm)	B (mm)	C (mm)	D (mm)	E (mm)	F (mm)
CH-S09FTXTB2S-NG	899	838	550	596	303	378
CH-S12FTXTB2S-NG	899	838	550	596	303	378
CH-S18FTXTB2S-NG	1003	920	610	790	370	427
CH-S24FTXTB2S-NG	1003	920	610	790	370	427

COMFORT AND TECHNOLOGIES

Cooper & Hunter

SERIES

NORDIC PREMIUM

NORDIC PREMIUM is presented in three colors (white/black/silver) which will suit any design solution. The conditioner has a premium energy saving complete set 'GENERATION V' (increased control of materials). Premium plasma air purifier is a unique system that cleans the air of bacteria and viruses.

NORDIC PREMIUM SERIES

PW PS PB

5 YEARS | +52°C | -28°C | 18dB | 3

CE RoHS EAC INVERTER

FUNCTION

Health	Comfort management

SLEEP mode | Plasma Air Cleaner | ECO-FRESH | Locking the remote control | Timer | LED display | Turbo mode | Stepless Fan Control | SWING mode | Dry mode | Wi-Fi

Intelligent control	Technological	Energy efficiency

Anti Freeze protection | Auto restart | Self diagnostics | Display backlight | R32 Refrigerant | Silent mide | Auto protection | +8°C | I-Action Technology | BLUE-FIN | Warm start | Energy Efficiency | Generation 5

MODEL			CH-S09FTXN-PS CH-S09FTXN-PW CH-S09FTXN-PB	CH-S12FTXN-PS CH-S12FTXN-PW CH-S12FTXN-PB	CH-S18FTXN-PS CH-S18FTXN-PW CH-S18FTXN-PB	CH-S24FTXN-PS CH-S24FTXN-PW CH-S24FTXN-PB
Capacity	Cooling	kW	2.64 (0.78-3.30)	3.52 (0.90-3.90)	5.30 (1.00-6.70)	6.60 (1.40-7.00)
	Heating	kW	3.00 (0.73- 3.40)	3.90 (0.80-4.20)	5.60 (1.10-6.80)	6.80 (1.50-7.90)
Power consumption	Cooling	kW	0.56 (0.06-1.45)	0.77 (0.06-1.56)	1.19 (0.10-2.46)	1.50 (0.10-2.80)
	Heating	kW	0.59 (0.14-1.55)	0.80 (0.14-1.65)	1.19 (0.20-2.30)	1.45 (0.21-2.50)
Energy efficiency	Cooling (SEER*)	kW/kW	8.1(A++)	8.0(A++)	7.2(A++)	6.8(A++)
	Heating (SCOP**)	kW/kW	5.1(A+++)	5.1(A+++)	5.1(A+++)	5.1(A+++)
INDOOR UNIT						
Power supply			~220-240V/50Hz/1 Ph			
Air productivity		m^3/h	360/470/580/670	360/470/580/670	510/670/810/900	510/670/810/900
Sound pressure level		dB (A)	18/21/26/38	19/22/28/39	25/27/30/41	27/30/37/44
Drainage		l/h	0.8	1.4	1.8	2.4
Weight		kg	10	10	14	14
OUTDOOR UNIT						
Sound pressure level		dB (A)	52	53	55	59
Compressor type			ротаційний			
Refrigerant type			R32			
Temperature range for cooling		°C	+18/+52			
Temperature range for heating		°C	-28/+24			
Weight		kg	25.5	28	35	41
Gas filling volume		kg	0.55	0.78	0.96	1.15
Liquid line diameter		mm/inch	6.38/1/4''	6.38/1/4''	6.38/1/4''	6.38/1/4''
Gas pipeline diameter		mm/inch	9.53/3/8''	9.53/3/8''	12.7/1/2''	15.88/5/8''
Maximum height difference		m	10	10	10	10
Maximum track length		m	20	20	25	25

* SEER – seasonal coefficient of system cooling capacity.
** SCOP – seasonal coefficient of system cooling capacity.

INDOOR UNIT

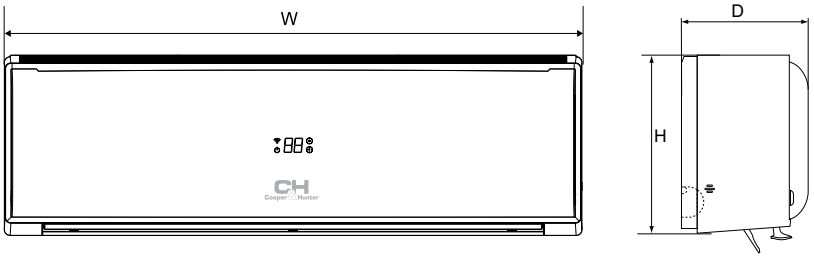

MODEL	W (mm)	H (mm)	D (mm)
CH-S09FTXN-PS/PW/PB	880	298	218
CH-S12FTXN-PS/PW/PB	880	298	218
CH-S18FTXN-PS/PW/PB	992	309	235
CH-S24FTXN-PS/PW/PB	992	309	235

OUTDOOR UNIT

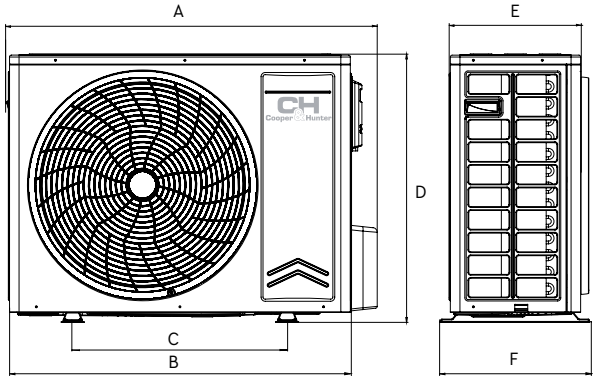

MODEL	A (mm)	B (mm)	C (mm)	D (mm)	E (mm)	F (mm)
CH-S09FTXN-PS/PW/PB	830	762	540	540	257	325
CH-S12FTXN-PS/PW/PB	830	762	540	540	257	325
CH-S18FTXN-PS/PW/PB	890	-	550	598	310	372
CH-S24FTXN-PS/PW/PB	960	-	560	700	340	396

INCREASED COMFORT
AND RELIABILITY

Cooper & Hunter

SERIES

AVALON

Domestic heat pump. Adapted for heating in northern countries. Innovative DOUBLE SELF-CLEAN technology allows the air conditioner to self-clean from dust, fungi, viruses and bacteria by instant freezing and then heat the heat exchanger plates to +57-58°C. The air conditioner is completely cleaned in 30 minutes. All this functions save your time and money on main- tenance and allow you to get healthy air.

СЕРІЯ

AVALON

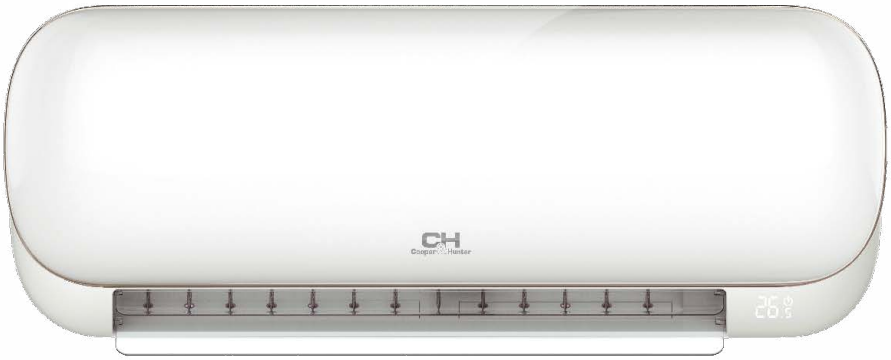

WE SAVE THE PLANET

R32 FREON

5 YEARS | +43°C | -25°C | 21dB | 2

CE | RoHS | EAC | INVERTER

FUNCTION

Health					Comfort management							
SLEEP mode	STOP DUST	ECO-FRESH	Double Self Clean	Self-clean	Locking the remote control	Timer	LED display	Turbo mode	Multi speed fan	SWING mode	Dry mode	Wi-Fi

Intelligent control				Technological							Energy efficiency	
Anti Freeze protection	Auto restart	Self diagnostics	Display backlight	R32 Refrigerant	Silent mide	Auto protection	+8°C	I-Action Technology	BLUE-FIN	Warm start	Energy Efficiency	Generation 5

MODEL			CH-S09FTXB-G CH-S09FTXB-W	CH-S12FTXB-G CH-S12FTXB-W
Capacity	Cooling	kW	2.70 (0.90-3.80)	3.53 (1.00-3.81)
	Heating	kW	3.20 (0.70-4.40)	3.81 (1.20-4.40)
Power consumption	Cooling	kW	0.60 (0.10-1.40)	0.88 (0.10-1.40)
	Heating	kW	0.72 (0.17-1.65)	0.95 (0.20-1.65)
Energy efficiency	Cooling (SEER*)	kW/kW	8.8 (A+++)	8.6 (A+++)
	Heating (SCOP**)	kW/kW	4.7 (A++)	4.6 (A++)
INDOOR UNIT				
Power supply			~220-240V/50Hz/1 Ph	
Air productivity		m^3/h	276/300/380/410/510/620/670	276/300/380/410/510/620/670
Sound pressure level		dB (A)	21/23/29/31/35/40/42	23/24/31/33/36/40/42
Drainage		l/h	0.8	1.4
Weight		kg	14	14
OUTDOOR UNIT				
Sound pressure level		dB (A)	52	54
Compressor type			Rotary	
Refrigerant type			R32	
Temperature range for cooling		°C	-15/+43	
Temperature range for heating		°C	-25/+24	
Weight		kg	33	33.5
Gas filling volume		kg	0.7	0.85
Liquid line diameter		mm/inch	6.38/1/4"	6.38/1/4"
Gas pipeline diameter		mm/inch	9.53/3/8"	9.53/3/8"
Maximum height difference		m	10	10
Maximum track length		m	15	20

* SEER – seasonal coefficient of system cooling capacity.
** SCOP – seasonal coefficient of system cooling capacity.

INDOOR UNIT

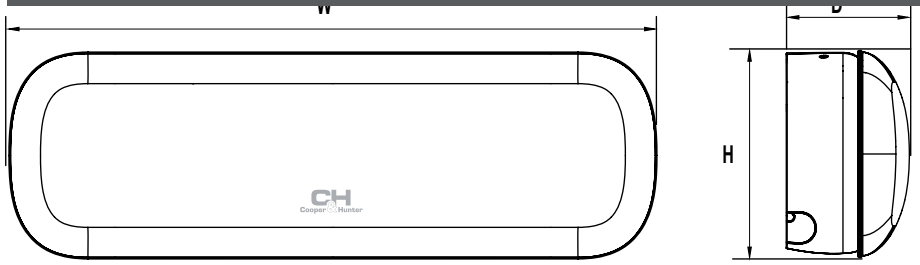

MODEL	W (mm)	H (mm)	D (mm)
CH-S09FTXB-G/W	980	312	186
CH-S12FTXB-G/W	980	312	186

OUTDOOR UNIT

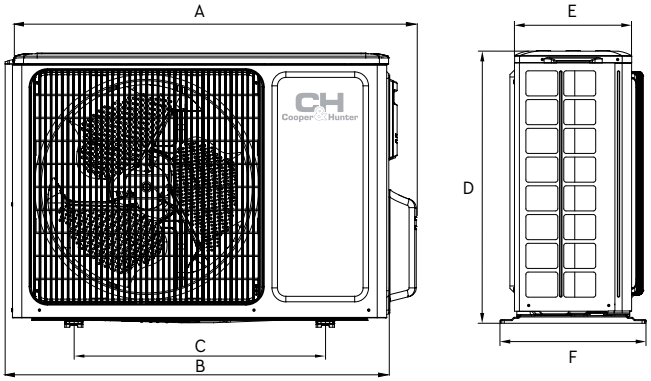

MODEL	A (mm)	B (mm)	C (mm)	D (mm)	E (mm)	F (mm)
CH-S09FTXB-G/W	848	780	540	596	257	320
CH-S12FTXB-G/W	848	780	540	596	257	320

DESIGN
AND FUNCTIONALITY

Cooper & Hunter

SERIES

IMPERIAL

Adapted for heating in northern countries. A special algorithm that ensures stable and efficient operation at negative temperatures outside. Pallet and compressor heating, outdoor unit fan speed controller. INTELLIGENT SENSOR - intelligent air flow distribution algorithm controlled built-in sensor that monitors the presence of a person in the room.

IMPERIAL SERIES

5 YEARS | +52°C | -25°C | 18dB

CE RoHS EAC INVERTER

Health

- SLEEP mode
- ECO-FRESH
- Double Self Clean
- Self-clean

Comfort management

- Locking the remote control
- Timer
- LED display
- Turbo mode
- Multi speed fan
- SWING mode
- Dry mode
- Autolight
- Wi-Fi

Intelligent control

- Anti Freeze protection
- Auto restart
- Self diagnostics
- Display backlight
- Intelligent sensor

Technological

- R32 Refrigerant
- Silent mide
- Auto protection
- +8°C
- I-Action Technology
- BLUE-FIN
- Warm start

Energy efficiency

- Energy Efficiency
- Generation 6

MODEL			CH-S09FTXZ-NG	CH-S12FTXZ-NG	CH-S18FTXZ-NG
Capacity	Cooling	kW	2.70 (0.20–4.40)	3.53 (0.22–4.60)	5.30 (0.30–6.40)
	Heating	kW	3.60 (0.80–5.00)	4.20 (0.80–5.20)	5.20 (1.00–6.20)
Power consumption	Cooling	kW	0.55 (0.13–1.30)	0.80 (0.13–1.40)	1.40 (0.16–2.10)
	Heating	kW	0.75 (0.22–1.60)	0.93 (0.22–1.65)	1.47 (0.30–2.45)
Energy efficiency	Cooling (SEER*)	kW/kW	9.4 (A+++)	9.0 (A+++)	7.0 (A++)
	Heating (SCOP**)	kW/kW	5.1 (A+++)	5.1 (A+++)	4.3 (A+)
INDOOR UNIT					
Power supply			~220-240V/50Hz/1 Ph		
Air productivity		m^3/h	180/270/300/400/500/530/600/700	180/270/300/400/500/550/700/800	250/300/350/450/500/550/700/800
Sound pressure level		dB (A)	18/19/22/29/33/35/38/42	20/22/23/29/34/37/39/44	22/24/25/31/35/37/40/46
Drainage		l/h	0.8	1.4	1.8
Weight		kg	17	17	17
OUTDOOR UNIT					
Sound pressure level		dB (A)	53	54	58
Compressor type			Rotary		
Refrigerant type			R32		
Temperature range for cooling		°C	-15/+52		
Temperature range for heating		°C	-25/+24		
Weight		kg	37.5	37.5	46
Gas filling volume		kg	1	1	1.2
Liquid line diameter		mm/inch	6.38/1/4"	6.38/1/4"	6.38/1/4"
Gas pipeline diameter		mm/inch	9.53/3/8"	9.53/3/8"	12.7/1/2"
Maximum height difference		m	10	10	10
Maximum track length		m	15	20	25

* SEER – seasonal coefficient of system cooling capacity.
** SCOP – seasonal coefficient of system cooling capacity.

INDOOR UNIT

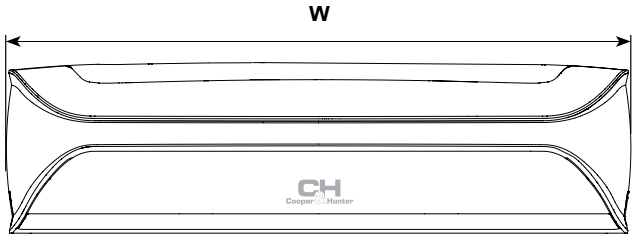

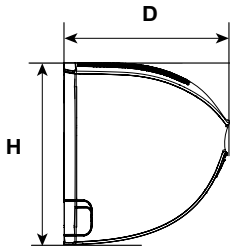

MODEL	W (mm)	H (mm)	D (mm)
CH-S09FTXZ-NG	977	281	295
CH-S12FTXZ-NG	977	281	295
CH-S18FTXZ-NG	977	281	295

OUTDOOR UNIT

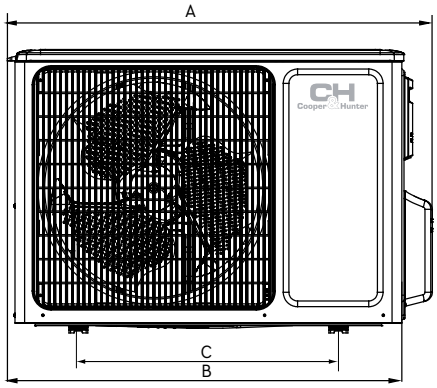

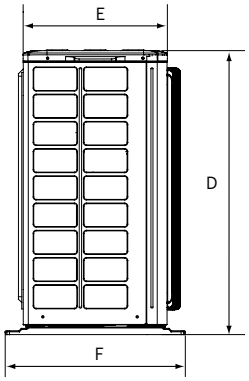

MODEL	A (mm)	B (mm)	C (mm)	D (mm)	E (mm)	F (mm)
CH-S09FTXZ-NG	899	838	490	596	303	378
CH-S12FTXZ-NG	899	838	490	596	303	378
CH-S18FTXZ-NG	965	897	560	700	340	396

NEW OPPORTUNITIES AND IDEAS

SERIES

SUPREME CONTINENTAL

Air conditioner of Supreme Continental series is new. It combines the modern design of the Supreme indoor unit with the power of the Arctic. Wide temperature range when cooling (-15°C to +43°C and when heating (-22°C to +24°C). The air conditioner is designed for heating in temperate climates. It has a modern and elegant appearance and fits perfectly into any interior.

SUPREME CONTINENTAL SERIES

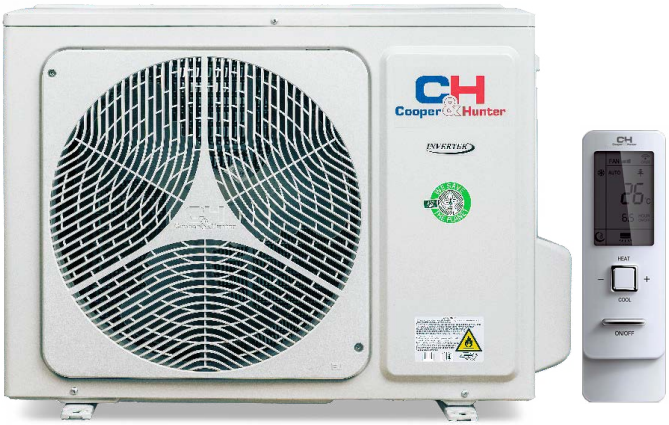

5 YEARS | +43°C | -25°C | 18dB

CE RoHS EAC INVERTER

FUNCTION

Health

SLEEP mode | CH 7-SK technology | ECO-FRESH | CH SMART-ION Filter | Self-clean

Comfort management

Locking the remote control | Timer | LED display | Turbo mode | Multi speed fan | SWING mode | Dry mode | Wi-Fi | I FEEL

Intelligent control

Anti Freeze protection | Auto restart | Self diagnostics | Display backlight | Wired controller connection

Technological

R32 Refrigerant | Silent mide | Auto protection | +8°C | I-Action Technology | BLUE-FIN | Warm start

Energy efficiency

Energy Efficiency | Generation 6

CONTROLS AND ACCESSORIES (OPTIONAL)

Wired Controller XK76

Wired Controller CE50-24/E

Wired Controller CE52-24/F

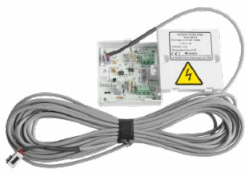

Detection Control Board MK010

MODEL			CH-S09FTXAL-GD CH-S09FTXAL-SC CH-S09FTXAL-BL CH-S09FTXAL-WP CH-S09FTXAL-FB	CH-S12FTXAL-GD CH-S12FTXAL-SC CH-S12FTXAL-BL CH-S12FTXAL-WP CH-S12FTXAL-FB	CH-S18FTXAL-GD CH-S18FTXAL-SC CH-S18FTXAL-BL CH-S18FTXAL-WP CH-S18FTXAL-FB	CH-S24FTXAL-GD CH-S24FTXAL-SC CH-S24FTXAL-BL CH-S24FTXAL-WP CH-S24FTXAL-FB
Capacity	Cooling	kW	2.70 (0.45–3.50)	3.50 (0.70–4.00)	5.30 (1.26–6.60)	7.00 (2.00–8.32)
	Heating	kW	2.93 (0.45–4.20)	3.81 (0.80–4.50)	5.57 (1.12–6.80)	7.20 (2.00–9.20)
Power consumption	Cooling	kW	0.59 (0.09–1.40)	0.95 (0.09–1.45)	1.55 (0.38–2.45)	2.00 (0.40–3.70)
	Heating	kW	0.65 (0.16–1.65)	0.98 (0.18–1.65)	1.43 (0.35–2.60)	1.85 (0.45–3.80)
Energy efficiency	Cooling (SEER*)	kW/kW	8.5 (A+++)	8.5 (A+++)	7.6 (A++)	7.0 (A++)
	Heating (SCOP**)	kW/kW	5.4 (A+++)	5.1 (A+++)	5.2 (A+++)	5.2 (A+++)
INDOOR UNIT						
Power supply			~220-240V/50Hz/1 Ph			
Air productivity		m^3/hour	390/420/450/490/540/590/660	390/420/450/490/540/590/680	306/520/580/610/750/800/850	750/850/900/950/1000/1100/1250
Sound pressure level		dB (A)	18/22/26/35/37/39/41	19/24/28/35/37/39/43	30/33/36/41/43/45/49	32/35/38/42/44/47/49
Drainage		l/hour	0.8	1.4	1.8	2.4
Weight		kg	10.5	11	13.5	16.5
OUTDOOR UNIT						
Sound pressure level		dB (A)	52	53	57	60
Compressor type			Rotary			
Refrigerant type			R-32			
Temperature range for cooling		°C	-15/+43			
Temperature range for heating		°C	-25/+24			
Weight		kg	33.5	33.5	45	53
Gas filling volume		kg	0.7	0.75	1	1.7
Liquid line diameter		mm/inch	6.38/1/4"	6.38/1/4"	6.38/1/4"	6.38/1/4"
Gas pipeline diameter		mm/inch	9.53/3/8"	9.53/3/8"	12.7/1/2"	15.88/5/8"
Maximum height difference		m	10	10	10	10
Maximum track length		m	15	20	25	25

* SEER – seasonal coefficient of system cooling capacity.
** SCOP – seasonal coefficient of system cooling capacity.

INDOOR UNIT

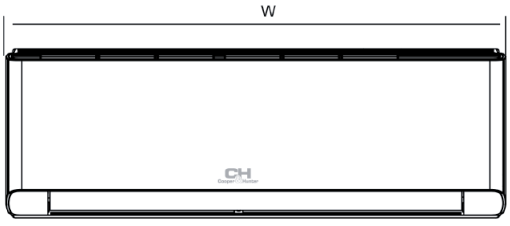

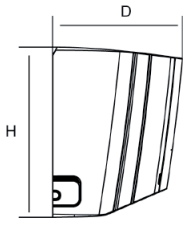

MODEL	W (мм)	H (мм)	D (мм)
CH-S09FTXAL-GD/SC/BL/WP/FB	865	290	210
CH-S12FTXAL-GD/SC/BL/WP/FB	865	290	210
CH-S18FTXAL-GD/SC/BL/WP/FB	996	301	225
CH-S24FTXAL-GD/SC/BL/WP/FB	1101	327	249

OUTDOOR UNIT

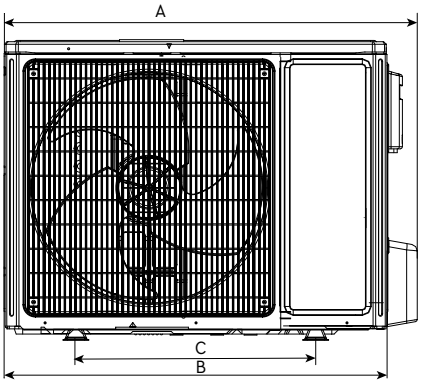

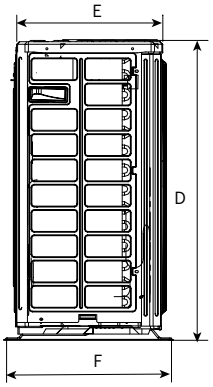

MODEL	A (mm)	B (mm)	C (mm)	D (mm)	E (mm)	F (mm)
CH-S09FTXAL-GD/SC/BL/WP/FB	848	780	540	596	257	320
CH-S12FTXAL-GD/SC/BL/WP/FB	848	780	540	596	257	320
CH-S18FTXAL-GD/SC/BL/WP/FB	965	897	560	700	340	396
CH-S24FTXAL-GD/SC/BL/WP/FB	965	892	560	700	341	396

Arctic is an appliance designed to operate in heating mode at low outside temperatures down to -25°C. Equipped with a sump heater and crankcase heater, as well as an air ioniser. The Arctic series air conditioners are designed to ensure the comfort of life. The European design, the clear geometric lines of the indoor unit and the LED display emphasise a concise and refined style.

Cooper & Hunter

SERIES

ARCTIC INC

EXCELLENCE
AND POWER

ARCTIC NG SERIES

+50°C -25°C 20dB

CE RoHS EAC INVERTER

FUNCTION

Health						Comfort management								
SLEEP mode	CH 7-SK technology	ECO-FRESH	CH SMART-ION Filter	Double Self-clean	Self-clean	Locking the remote control	Timer	LED display	Turbo mode	Multi speed fan	SWING mode	Dry mode	Wi-Fi	I FEEL

Intelligent control					Technological							Energy efficiency	
Anti Freeze protection	Auto restart	Self diagnostics	Display backlight	Wired controller connection	R32 Refrigerant	Silent mide	Auto protection	+8°C	I-Action Technology	BLUE-FIN	Warm start	Energy Efficiency	Generation 6

CONTROLS AND ACCESSORIES (OPTIONAL)

Wired Controller
XK76

Wired Controller
CE50-24/E

Wired Controller
CE52-24/F

MODEL			CH-S09FTXLA2-NG	CH-S12FTXLA2-NG	CH-S18FTXLA2-NG	CH-S24FTXLA2-NG
Capacity	Cooling	kW	2.70 (0.80–3.80)	3.51 (0.90–4.40)	5.20 (1.00–6.10)	7.10 (2.00–8.85)
	Heating	kW	3.00 (0.90- 4.25)	3.81 (0.90–4.70)	5.60 (1.10–6.60)	7.80 (1.80–9.45)
Power consumption	Cooling	kW	0.69 (0.10–1.30)	0.96 (0.22–1.40)	1.58 (0.10–2.35)	2.03 (0.45–2.90)
	Heating	kW	0.70 (0.15–1.40)	0.95 (0.22–1.55)	1.44 (0.18–2.40)	2.00 (0.35–3.00)
Energy efficiency	Cooling (SEER*)	kW/kW	7.5 (A++)	7.1 (A++)	7.1 (A++)	7.0 (A++)
	Heating (SCOP**)	kW/kW	5.3 (A+++)	5.2 (A+++)	5.7 (A+++)	5.4 (A+++)
INDOOR UNIT						
Power supply			~220-240 В/50 Гц			
Air productivity		m^3/hour	390/420/440/470/540/570/610	360/420/480/540/600/650/700	460/520/570/610/680/750/850	800/850/900/950/1000/1100/1250
Sound pressure level		dB (A)	22/24/26/28/32/35/37	22/24/26/29/32/35/38	27/31/34/35/38/41/45	29/34/36/37/39/42/47
Drainage		l/hour	0.80	1.40	1.9	2.4
Weight		kg	10.5	10.5	13	16
OUTDOOR UNIT						
Sound pressure level		dB (A)	50	52	56	59
Compressor type			Rotary			
Refrigerant type			R32			
Temperature range for cooling		°C	-15 ... +50			
Temperature range for heating		°C	-25 ... +30			
Weight		kg	23.5	24.5	30.5	41.5
Gas filling volume		kg	0.53	0.57	0.82	1.50
Liquid line diameter		mm/inch	6.38/1/4"	6.38/1/4"	6.38/1/4"	6.38/1/4"
Gas pipeline diameter		mm/inch	9.53/3/8"	9.53/3/8"	12.7/1/2"	15.88/5/8"
Maximum height difference		m	10	10	10	10
Maximum track length		m	15	15	25	25

* SEER – seasonal coefficient of system cooling capacity.
** SCOP – seasonal coefficient of system cooling capacity.

INDOOR UNIT

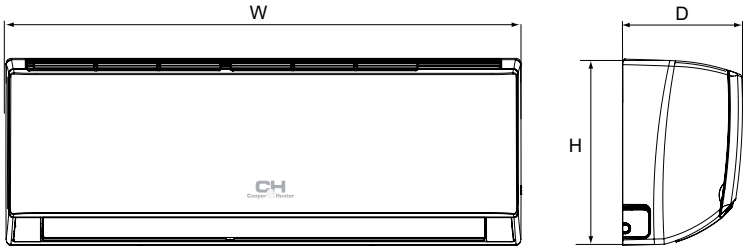

MODEL	W (mm)	H (mm)	D (mm)
CH-S09FTXLA2-NG	845	289	209
CH-S12FTXLA2-NG	845	289	209
CH-S18FTXLA2-NG	970	300	224
CH-S24FTXLA2-NG	1078	325	246

OUTDOOR UNIT

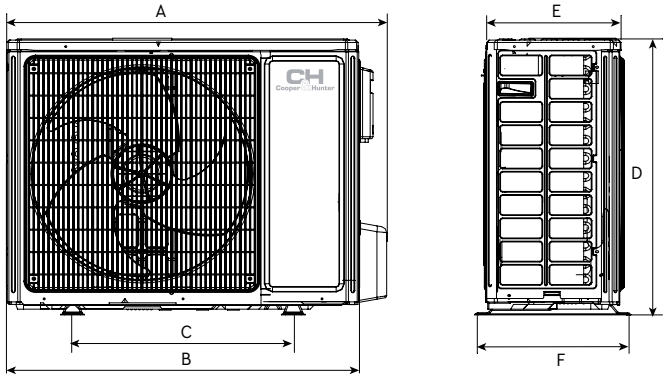

MODEL	A (mm)	B (mm)	C (mm)	D (mm)	E (mm)	F (mm)
CH-S09FTXLA2-NG	732	675	455	555	285	330
CH-S12FTXLA2-NG	732	675	455	555	285	330
CH-S18FTXLA2-NG	802	745	513	555	300	350
CH-S24FTXLA2-NG	958	889	570	660	340	402

MODERN AND ECOLOGICAL

Reliable winter air conditioning Nordic Continental heats your home even at outdoor temperatures down to -25°C. Thanks to the Wi-Fi function, the air conditioner is controlled from anywhere from your own smartphone. Ecological freon R32 doesn't pollute the environment.

Cooper & Hunter

SERIES

NORDIC CONTINENTAL

NORDIC CONTINENTAL SERIES

5 YEARS | +43°C | -25°C | 20dB

CE RoHS EAC INVERTER

FUNCTION

Health

- SLEEP mode
- CH 7-SK technology
- ECO-FRESH
- CH SMART-ION Filter
- Double Self-clean
- Self-clean

Comfort management

- Locking the remote control
- Timer
- LED display
- Turbo mode
- Multi speed fan
- SWING mode
- Dry mode
- Wi-Fi
- I FEEL

Intelligent control

- Anti Freeze protection
- Auto restart
- Self diagnostics
- Display backlight
- Wired controller connection

Technological

- R32 Refrigerant
- Silent mide
- Auto protection
- +8°C
- I-Action Technology
- BLUE-FIN
- Warm start

Energy efficiency

- Energy Efficiency
- Generation 6

CONTROLS AND ACCESSORIES (OPTIONAL)

Wired Controller XK76

Wired Controller CE50-24/E

Wired Controller CE52-24/F

MODEL			CH-S09FTXR2-NG	CH-S12FTXR2-NG	CH-S18FTXR2-NG	CH-S24FTXR2-NG
Capacity	Cooling	kW	2.70 (0.80-3.80)	3.51 (0.90-4.40)	5.20 (1.00-6.10)	7.10 (2.00-8.85)
	Heating	kW	3.00 (0.90- 4.25)	3.81 (0.90-4.70)	5.60 (1.10-6.60)	7.80 (1.80-9.45)
Power consumption	Cooling	kW	0.69 (0.10-1.30)	0.96 (0.22-1.40)	1.58 (0.10-2.35)	2.03 (0.45-2.90)
	Heating	kW	0.70 (0.15-1.40)	0.95 (0.22-1.55)	1.44 (0.18-2.40)	2.00 (0.35-3.00)
Energy efficiency	Cooling (SEER*)	kW/kW	7.5 (A++)	7.1 (A++)	7.1 (A++)	7.0 (A++)
	Heating (SCOP**)	kW/kW	5.3 (A+++)	5.2 (A+++)	5.7 (A+++)	5.4 (A+++)
INDOOR UNIT						
Power supply			~220-240V/50Hz/1 Ph			
Air productivity		m^3/hour	390/420/440/470/540/570/610	360/420/480/540/600/650/700	460/520/570/610/680/750/850	800/850/900/950/1000/1100/1250
Sound pressure level		dB (A)	20/22/24/26/28/32/37	21/23/24/26/29/33/38	24/27/31/33/38/41/45	27/29/35/37/39/42/47
Drainage		l/hour	0.80	1.40	1.9	2.4
Weight		kg	10.5	10.5	13	16
OUTDOOR UNIT						
Sound pressure level		dB (A)	50	52	56	59
Compressor type			Rotary			
Refrigerant type			R-32			
Temperature range for cooling		°C	-15/+43			
Temperature range for heating		°C	-25/+24			
Weight		kg	24.5	24.5	30.5	41.5
Gas filling volume		kg	0.53	0.57	0.82	1.50
Liquid line diameter		mm/inch	6.38/1/4"	6.38/1/4"	6.38/1/4"	6.38/1/4"
Gas pipeline diameter		mm/inch	9.53/3/8"	9.53/3/8"	12.7/1/2"	15.88/5/8"
Maximum height difference		m	10	10	10	10
Maximum track length		m	15	15	25	25

* SEER - seasonal coefficient of system cooling capacity.
** SCOP - seasonal coefficient of system cooling capacity.

INDOOR UNIT

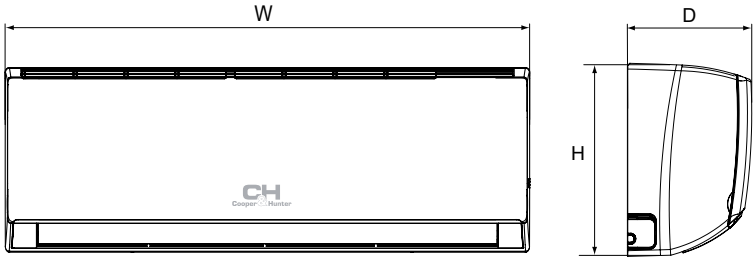

MODEL	W (mm)	H (mm)	D (mm)
CH-S09FTXR2-NG	790	275	200
CH-S12FTXR2-NG	845	289	209
CH-S18FTXR2-NG	970	300	224
CH-S24FTXR2-NG	1078	325	246

OUTDOOR UNIT

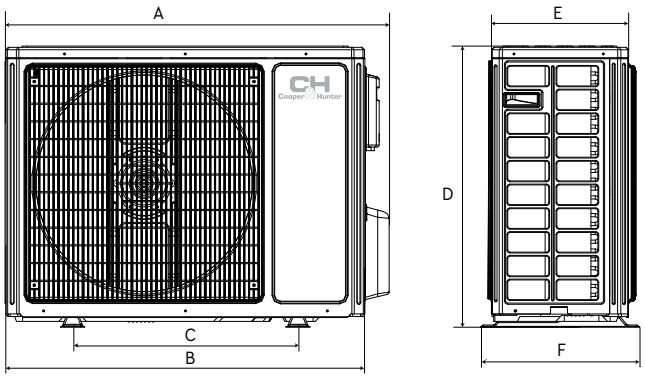

MODEL	A (мм)	B (mm)	C (mm)	D (mm)	E (mm)	F (mm)
CH-S09FTXR2-NG	732	675	455	555	285	330
CH-S12FTXR2-NG	732	675	455	555	285	330
CH-S18FTXR2-NG	802	745	513	555	300	350
CH-S24FTXR2-NG	958	889	570	660	340	402

MINIMALISTIC
AND EFFECTIVE

Cooper & Hunter

SERIES

NORDIC EVO NG

Exquisite design air conditioning integrated with various technologies. I-Action provides
- smooth and reliable operation of the compressor at ultra-low frequencies (1 Hz). Step-less Fan Control is a unique technology that guarantees smooth speed control of the indoor unit fan in a wide range from 1 to 100%.

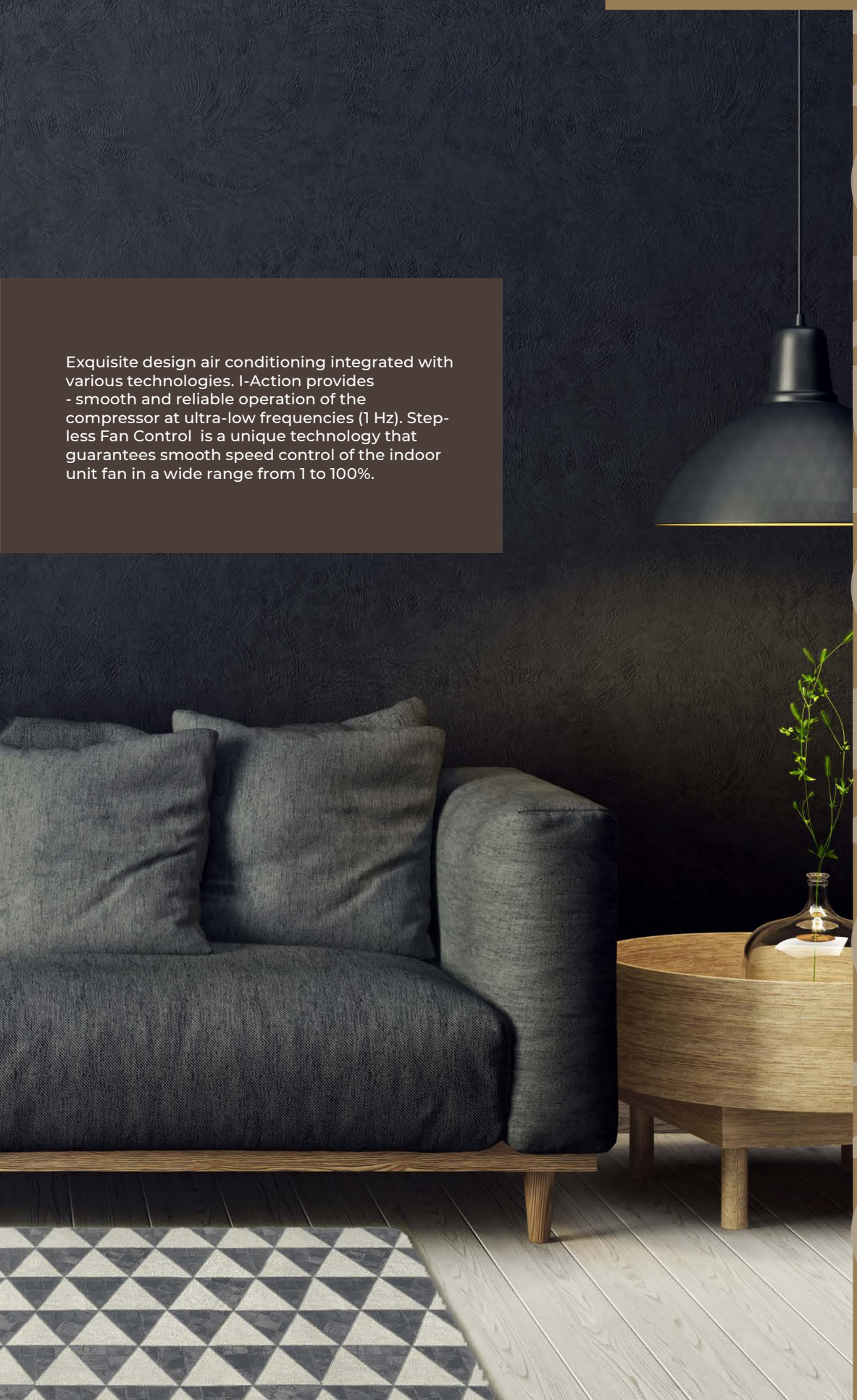

NORDIC EVO NG SERIES

5 YEARS | +52°C | −25°C | 19dB

CE RoHS EAC INVERTER

FUNCTION

Health	Comfort management

SLEEP mode · Plasma Air Cleaner · ECO-FRESH · Locking the remote control · Timer · LED display · Turbo mode · Stepless Fan Control · SWING mode · Dry mode · I FEEL · Wi-Fi

Intelligent control	Technological	Energy efficiency

Anti Freeze protection · Auto restart · Self diagnostics · Display backlight · R32 Refrigerant · Silent mide · Auto protection · +8°C · I-Action Technology · BLUE-FIN · Warm start · Energy Efficiency · Generation 6

MODEL			CH-S09FTXN-NG	CH-S12FTXN-NG	CH-S18FTXN-NG	CH-S24FTXN-NG
Capacity	Cooling	kW	2.60 (0.48-2.90)	3.40 (0.60-3.90)	5.27 (1.00-6.70)	6.45 (1.40-7.00)
	Heating	kW	2.80 (0.73- 3.30)	3.60 (0.80-4.20)	5.50 (1.10-6.80)	6.60 (1.50-7.90)
Power consumption	Cooling	kW	0.57 (0.13-1.43)	0.77 (0.09-1.56)	1.19 (0.32-2.46)	1.47 (0.38-2.80)
	Heating	kW	0.62 (0.17-1.55)	0.80 (0.14-1.65)	1.19 (0.35-2.30)	1.42 (0.40-2.50)
Energy efficiency	Cooling (SEER*)	kW/kW	6.7(A++)	6.5(A++)	6.4(A++)	6.4(A++)
	Heating (SCOP**)	kW/kW	5.1 (A+++)	5.1 (A+++)	5.3 (A+++)	5.1 (A+++)
INDOOR UNIT						
Power supply			~220-240V/50Hz/1 Ph			
Air productivity		m^3/hour	150/230/440/520	180/250/470/550	480/570/760/850	560/670/930/1090
Sound pressure level		dB (A)	19/24/36/40	20/25/37/41	26/29/39/43	27/31/40/45
Drainage		l/hour	0.8	1.4	1.8	2.04
Weight		kg	9	9	13	16
OUTDOOR UNIT						
Sound pressure level		dB (A)	52	53	55	59
Compressor type			Rotary			
Refrigerant type			R32			
Temperature range for cooling		°C	+18/+52			
Temperature range for heating		°C	-25/+24			
Weight		kg	29	30.5	40	43.5
Gas filling volume		kg	0.52	0.78	0.93	1.05
Liquid line diameter		mm/inch	6.38/1/4"	6.38/1/4"	6.38/1/4"	6.38/1/4"
Gas pipeline diameter		mm/inch	9.53/3/8"	9.53/3/8"	12.7/1/2"	16.7/5/8"
Maximum height difference		m	10	10	10	10
Maximum track length		m	20	20	25	25

* SEER – seasonal coefficient of system cooling capacity.
** SCOP – seasonal coefficient of system cooling capacity.

INDOOR UNIT

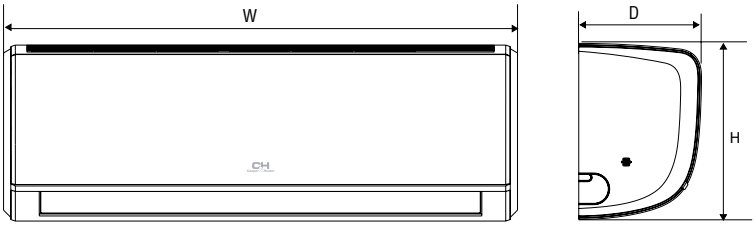

MODEL	W (mm)	H (mm)	D (mm)
CH-S09FTXN-NG	792	279	195
CH-S12FTXN-NG	792	279	195
CH-S18FTXN-NG	972	302	224
CH-S24FTXN-NG	1081	327	248

OUTDOOR UNIT

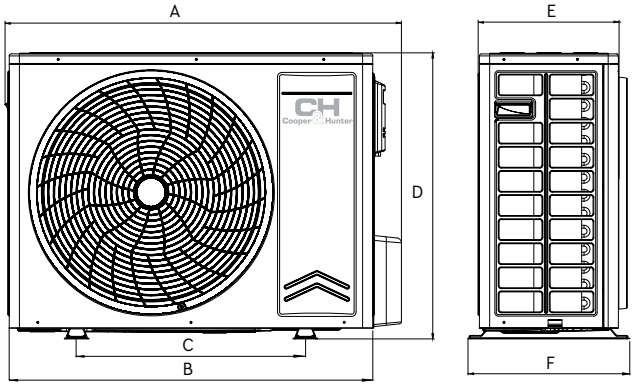

MODEL	A (mm)	B (mm)	C (mm)	D (mm)	E (mm)	F (mm)
CH-S09FTXN-NG	830	762	540	540	257	325
CH-S12FTXN-NG	830	762	540	540	257	325
CH-S18FTXN-NG	890	-	550	598	310	372
CH-S24FTXN-NG	960	-	560	700	340	396

MODERN DESIGN
& PRODUCTIVITY

Cooper & Hunter

SERIES

DAYTONA

DAYTONA front panel perfectly fits into any interior. A wide range of operating temperatures allows to use air condotioner all year round. Works even when at low outdoor temperatures (down to -25 ° C) in heating mode. Meanwhile, cooling mode provides freshness in summer to your house.

DAYTONA SERIES

WP

SC

BL

5 YEARS | +43°C | −25°C | 18dB | 3

CE RoHS EAC INVERTER

FUNCTION

Health	Comfort management

SLEEP mode · CH 7-SK technology · ECO-FRESH · CH SMART-ION Filter · Double Self-clean · Self-clean · Locking the remote control · Timer · LED display · Turbo mode · Multi speed fan · SWING mode · Dry mode · Wi-Fi · I FEEL

Intelligent control	Technological	Energy efficiency

Anti Freeze protection · Auto restart · Self diagnostics · Display backlight · Wired controller connection · R32 Refrigerant · Silent mide · Auto protection · +8°C · I-Action Technology · BLUE-FIN · Warm start · Energy Efficiency · Generation 6

CONTROLS AND ACCESSORIES (OPTIONAL)

Wired Controller XK76

Wired Controller CE50-24/E

Wired Controller CE52-24/F

MODEL			CH-S09FTXD2-WP CH-S09FTXD2-BL CH-S09FTXD2-SC	CH-S12FTXD2-WP CH-S12FTXD2-BL CH-S12FTXD2-SC	CH-S18FTXD2-WP CH-S18FTXD2-BL CH-S18FTXD2-SC	CH-S24FTXD2-WP CH-S24FTXD2-BL CH-S24FTXD2-SC
Capacity	Cooling	kW	2.70 (0.80-3.80)	3.51 (0.90-4.40)	5.20 (1.00-6.10)	7.10 (2.00-8.85)
	Heating	kW	3.00 (0.90- 4.25)	3.81 (0.90-4.70)	5.60 (1.10-6.60)	7.80 (1.80-9.45)
Power consumption	Cooling	kW	0.69 (0.10-1.30)	0.96 (0.22-1.40)	1.58 (0.10-2.35)	2.03 (0.45-2.90)
	Heating	kW	0.70 (0.15-1.40)	0.95 (0.22-1.55)	1.44 (0.18-2.40)	2.00 (0.35-3.00)
Energy efficiency	Cooling (SEER*)	kW/kW	7.5 (A++)	7.1 (A++)	7.1 (A++)	7.0 (A++)
	Heating (SCOP**)	kW/kW	5.3 (A+++)	5.2 (A+++)	5.7 (A+++)	5.4 (A+++)
INDOOR UNIT						
Power supply			~ 220-240V/50Hz/1 Ph			
Air productivity		m^3/h	390/420/440/470/540/570/610	390/420/450/490/560/620/680	470/520/570/610/650/720/800	800/850/900/950/1000/1100/1250
Sound pressure level		dB (A)	18/22/24/26/30/34/37	19/22/24/27/32/35/38	24/27/30/34/38/40/45	26/28/35/37/39/42/47
Drainage		l/hour	0.80	1.40	1.9	2.4
Weight		kg	11	11	13.5	17.5
OUTDOOR UNIT						
Sound pressure level		dB (A)	50	52	56	59
Compressor type			Rotary			
Refrigerant type			R32			
Temperature range for cooling		°C	-15 ... +50			
Temperature range for heating		°C	-25 ... +30			
Weight		kg	23.5	24.5	30.5	41.5
Gas filling volume		kg	0.53	0.57	0.82	1.50
Liquid line diameter		mm/inch	6.38/1/4"	6.38/1/4"	6.38/1/4"	6.38/1/4"
Gas pipeline diameter		mm/inch	9.53/3/8"	9.53/3/8"	12.7/1/2"	15.88/5/8"
Maximum height difference		m	10	10	10	10
Maximum track length		m	15	15	25	25

* SEER – seasonal coefficient of system cooling capacity.
** SCOP – seasonal coefficient of system cooling capacity.

INDOOR UNIT

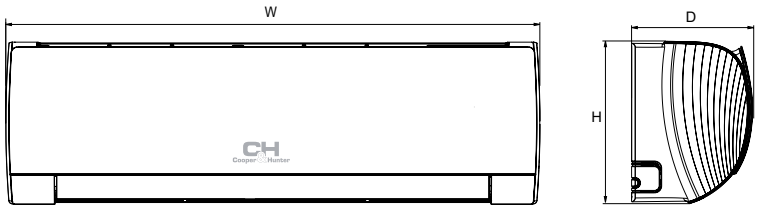

MODEL	W (mm)	H (mm)	D (mm)
CH-S09FTXD2-WP/BL/SC	894	291	211
CH-S12FTXD2-WP/BL/SC	894	291	211
CH-S18FTXD2-WP/BL/SC	1017	304	221
CH-S24FTXD2-WP/BL/SC	1135	328	247

OUTDOOR UNIT

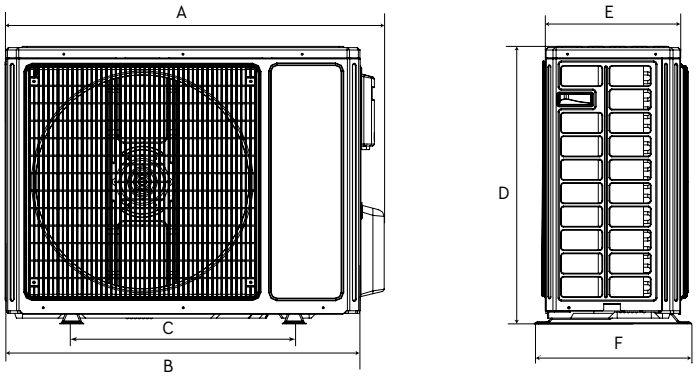

MODEL	A (mm)	B (mm)	C (mm)	D (mm)	E (mm)	F (mm)
CH-S09FTXD2-WP/BL/SC	732	675	455	555	285	330
CH-S12FTXD2-WP/BL/SC	732	675	455	555	285	330
CH-S18FTXD2-WP/BL/SC	802	745	512	555	300	350
CH-S24FTXD2-WP/BL/SC	958	889	570	660	340	402

HIGH QUALITY
AND RELIABILITY

Cooper & Hunter

SERIES

VERITAS NG

Veritas air conditioners are a popular range among customers. They are wall-mounted air conditioners that use environmentally friendly R32 refrigerant. The units incorporate all the technologies used in the premium range, including 7-sky filtration technology, an integrated WIFI module and plasma ioniser.

VERITAS NG SERIES

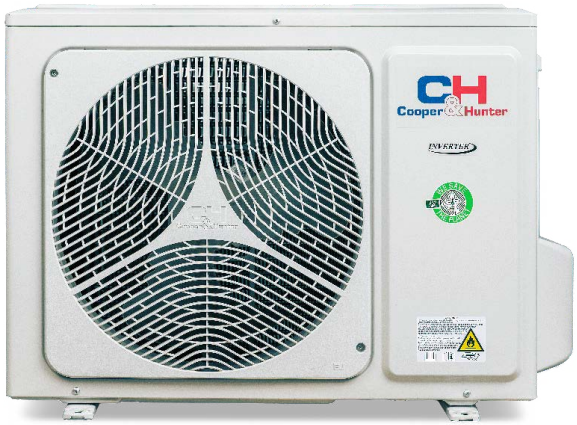

5 YEARS

+48°C

−15°C

20dB

CE RoHS EAC INVERTER

FUNCTION

Health

- SLEEP mode
- CH 7-SK technology
- ECO-FRESH
- CH SMART-ION Filter
- Double Self-clean
- Self-clean

Comfort management

- Locking the remote control
- Timer
- LED display
- Turbo mode
- Multi speed fan
- SWING mode
- Dry mode
- Wi-Fi
- I FEEL

Intelligent control

- Anti Freeze protection
- Auto restart
- Self diagnostics
- Wired controller connection

Technological

- R32 Refrigerant
- Silent mide
- Auto protection
- +8°C
- I-Action Technology
- BLUE-FIN
- Warm start

Energy efficiency

- Energy Efficiency
- Generation 6

CONTROLS AND ACCESSORIES (OPTIONAL)

Remote Controller YAG1FB2 (WiFi). For 24K model

Wired Controller XK76

Wired Controller CE50-24/E

Wired Controller CE52-24/F

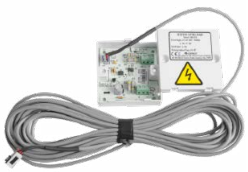

Detection Control Board MK010

MODEL			CH-S07FTXQ2-NG	CH-S09FTXQ-NG	CH-S12FTXQ-NG	CH-S18FTXQ-NG	CH-S24FTXQ2-NG
Capacity	Cooling	kW	2.35 (0.37-2.53)	2.60 (0.50-3.35)	3.50 (0.60-3.60)	5.00 (0.65-5.20)	7.10 (2.00-8.85)
	Heating	kW	2.50 (0.51-2.60)	2.80 (0.50-3.30)	3.60 (0.60-3.80)	5.30 (0.70-5.40)	7.80 (1.80-9.45)
Power consumption	Cooling	kW	0.68 (0.10-0.98)	0.72 (0.16-1.40)	0.97 (0.12-1.40)	1.39 (0.15-1.70)	2.03 (0.45-2.90)
	Heating	kW	0.65 (0.10-1.23)	0.71 (0.20-1.50)	0.92 (0.12-1.50)	1.34 (0.16-1.6.0)	2.00 (0.35-3.00)
Energy efficiency	Cooling (SEER*)	kW/kW	5.1 (A)	6.1 (A++)	6.1 (A++)	6.1 (A++)	7.0 (A++)
	Heating (SCOP**)	kW/kW	3.8 (A)	4.0 (A+)	4.0 (A+)	4.0 (A+)	5.4 (A+++)
INDOOR UNIT							
Power supply			~220-240V/50Hz/1 Ph				
Air productivity		m^3/hour	300/390/420/500	330/430/490/560	290/410/480/560	520/610/720/850	800/850/900/950/1050/1150/1250
Sound pressure level		dB (A)	20/22/25/29/38	23/26/30/36	24/28/32/37	28/33/39/45	27/29/35/37/39/42/47
Drainage		l/hour	0.8	0.8	1.4	1.8	2.4
Weight		kg	8.2	9	9	13.5	16
OUTDOOR UNIT							
Sound pressure level		dB (A)	51	52	52	54	59
Compressor type			Rotary				
Refrigerant type			R32				
Temperature range for cooling		°C	-15/+48				-15 ... +50
Temperature range for heating		°C	-15/+24				-25 ... +30
Weight		kg	20.8	29.5	31	34	41.5
Gas filling volume		kg	0.45	0.6	0.59	0.77	1.50
Liquid line diameter		mm/inch	6.38/1/4"	6.38/1/4"	6.38/1/4"	6.38/1/4"	6.38/1/4"
Gas pipeline diameter		mm/inch	9.53/3/8"	9.53/3/8"	9.53/3/8"	9.53/3/8"	15.88/5/8"
Maximum height difference		m	10	10	10	10	10
Maximum track length		m	15	15	20	20	25

* SEER – seasonal coefficient of system cooling capacity.
** SCOP – seasonal coefficient of system cooling capacity.

INDOOR UNIT

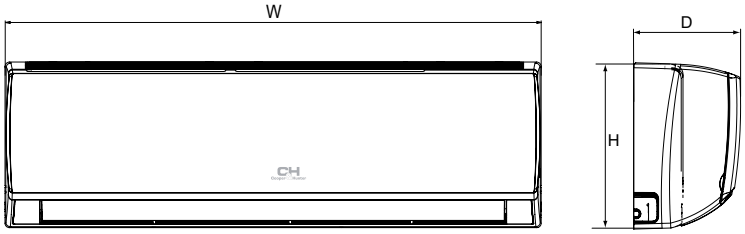

MODEL	W (mm)	H (mm)	D (mm)
CH-S07FTXQ2-NG	713	270	195
CH-S09FTXQ-NG	790	275	200
CH-S12FTXQ-NG	790	275	200
CH-S18FTXQ-NG	970	300	225
CH-S24FTXQ2-NG	1078	325	246

OUTDOOR UNIT

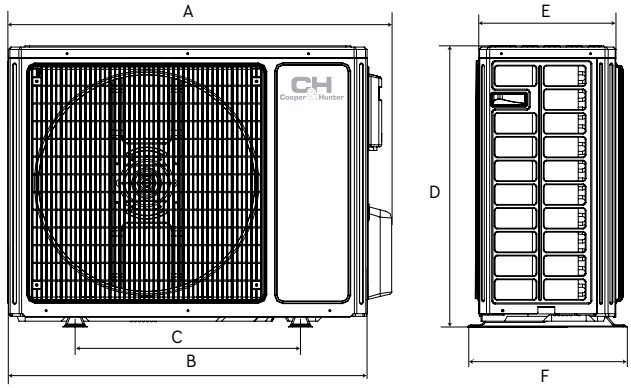

MODEL	A (mm)	B (mm)	C (mm)	D (mm)	E (mm)	F (mm)
CH-S07FTXQ2-NG	710	650	430	450	244	293
CH-S09FTXQ-NG	782	712	510	540	257	320
CH-S12FTXQ-NG	848	780	540	596	257	320
CH-S18FTXQ-NG	848	780	540	596	257	320
CH-S24FTXQ2-NG	958	889	570	660	340	402

BEST COMFORT
& RELIABILITY

Cooper & Hunter

SERIES

ALPHA NG

ALPHA NG series air conditioners satisfied all the needs of indoor climate of modern person. All functions are easy to control remotely via Wi-Fi, at the time SELF-CLEANING function simplifie the service of the air conditioner.

ALPHA NG SERIES

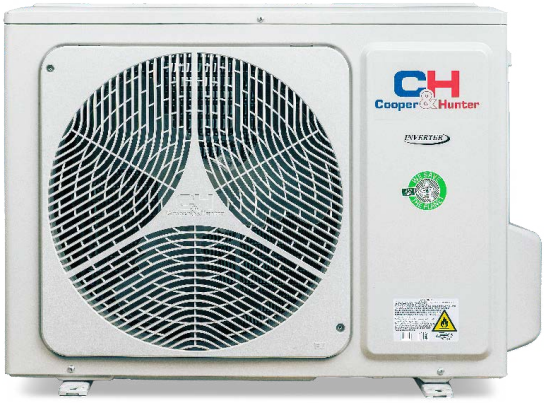

5 YEARS | +48°C | –15°C | 20dB

CE RoHS EAC INVERTER

FUNCTION

Health	Comfort management

SLEEP mode · CH 7-SK technology · ECO-FRESH · CH SMART-ION Filter · Double Self-clean · Self-clean · Locking the remote control · Timer · LED display · Turbo mode · Multi speed fan · SWING mode · Dry mode · Wi-Fi · I FEEL

Intelligent control	Technological	Energy efficiency

Anti Freeze protection · Auto restart · Self diagnostics · Wired controller connection · R32 Refrigerant · Silent mide · Auto protection · +8°C · I-Action Technology · BLUE-FIN · Warm start · Energy Efficiency · Generation 6 For 7K, 24K models

CONTROLS AND ACCESSORIES (OPTIONAL)

Wired Controller XK76

Wired Controller CE50-24/E

Wired Controller CE52-24/F

MODEL			CH-S07FTXE2-NG	CH-S09FTXE-NG	CH-S12FTXE-NG	CH-S18FTXE-NG	CH-S24FTXE2-NG
Capacity	Cooling	kW	2.35 (0.37-2.53)	2.60 (0.50-3.35)	3.50 (0.60-3.60)	5.00 (0.65-5.20)	7.10 (2.00-8.85)
	Heating	kW	2.50 (0.51-2.60)	2.80 (0.50-3.30)	3.60 (0.60-3.80)	5.30 (0.70-5.40)	7.80 (1.80-9.45)
Power consumption	Cooling	kW	0.68 (0.10-0.98)	0.72 (0.16-1.40)	0.97 (0.12-1.40)	1.39 (0.15-1.70)	2.03 (0.45-2.90)
	Heating	kW	0.65 (0.10-1.23)	0.71 (0.20-1.50)	0.92 (0.12-1.50)	1.34 (0.16-1.6.0)	2.00 (0.35-3.00)
Energy efficiency	Cooling (SEER*)	kW/kW	5.1 (A)	6.1 (A++)	6.1 (A++)	6.1 (A++)	7.0 (A++)
	Heating (SCOP**)	kW/kW	3.8 (A)	4.0(A+)	4.0(A+)	4.0(A+)	5.4 (A+++)
INDOOR UNIT							
Power supply			~220-240V/50Hz/1 Ph				
Air productivity		m^3/hour	300/390/420/500	330/430/490/560	290/410/480/560	520/610/720/850	800/850/900/950/1000/1100/1250
Sound pressure level		dB (A)	20/22/25/29/38	23/26/30/36	24/28/32/37	28/33/39/45	27/29/35/37/39/42/47
Drainage		l/hour	0.8	0.8	1.4	1.8	2.4
Weight		kg	8.2	9	9	13.5	16
OUTDOOR UNIT							
Sound pressure level		dB (A)	51	52	52	54	59
Compressor type			Rotary				
Refrigerant type			R32				
Temperature range for cooling		°C	-15/+48				-15 ... +50
Temperature range for heating		°C	-15/+24				-25 ... +30
Weight		kg	20.8	29.5	31	34	41.5
Gas filling volume		kg	0.45	0.6	0.59	0.77	1.50
Liquid line diameter		mm/inch	6.38/1/4"	6.38/1/4"	6.38/1/4"	6.38/1/4"	6.38/1/4"
Gas pipeline diameter		mm/inch	9.53/3/8"	9.53/3/8"	9.53/3/8"	9.53/3/8"	15.88/5/8"
Maximum height difference		m	10	10	10	10	10
Maximum track length		m	15	15	20	20	25

* SEER - seasonal coefficient of system cooling capacity.
** SCOP - seasonal coefficient of system cooling capacity.

INDOOR UNIT

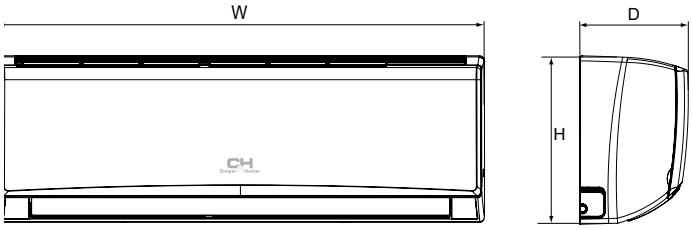

MODEL	W (mm)	H (mm)	D (mm)
CH-S07FTXE2-NG	713	270	195
CH-S09FTXE-NG	790	275	200
CH-S12FTXE-NG	790	275	200
CH-S18FTXE-NG	970	300	225
CH-S24FTXE2-NG	1078	325	246

OUTDOOR UNIT

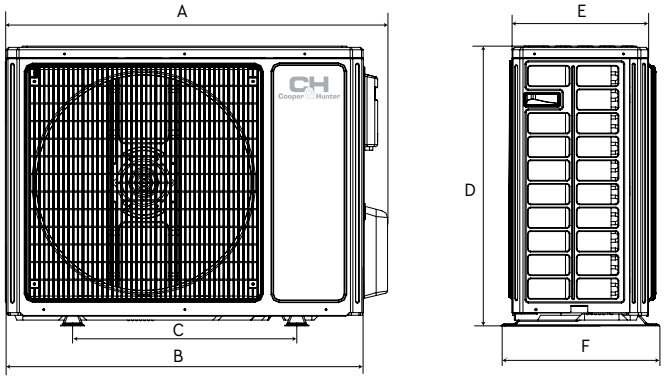

MODEL	A (mm)	B (mm)	C (mm)	D (mm)	E (mm)	F (mm)
CH-S07FTXE2-NG	710	650	430	450	244	293
CH-S09FTXE-NG	782	712	510	540	257	320
CH-S12FTXE-NG	848	780	540	596	257	320
CH-S18FTXE-NG	848	780	540	596	257	320
CH-S24FTXE2-NG	958	889	570	660	340	402

RELIABLE
& INNOVATED

Cooper & Hunter

SERIES

VITAL INVERTER

Vital is a new-generation wall-mounted air conditioner with a minimalist white panel. The unit uses R32 refrigerant. The Vita I series of wall-mounted air conditioners has all the features of premium equipment. It features CH 7-SKY filtration technology, integrated WiFi module and plasma ioniser.

VITAL INVERTER SERIES

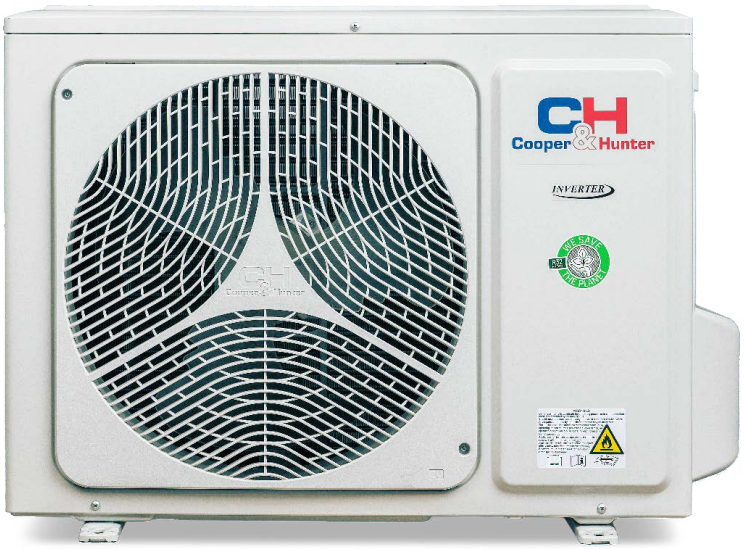

5 YEARS | +43°C | −15°C | 21dB | INVERTER

CE RoHS EAC

FUNCTION

Health

- SLEEP mode
- CH 7-SK technology
- ECO-FRESH
- CH SMART-ION Filter
- Double Self-clean
- Self-clean

Comfort management

- Locking the remote control
- Timer
- LED display
- Turbo mode
- Multi speed fan
- SWING mode
- Dry mode
- Wi-Fi
- I FEEL

Intelligent control

- Anti Freeze protection
- Auto restart
- Self diagnostics

Technological

- R32 Refrigerant
- Silent mide
- Auto protection
- +8°C
- I-Action Technology
- BLUE-FIN
- Warm start

Energy efficiency

- Energy Efficiency
- Generation 6 For 7K, 24K models

MODEL			CH-S07FTXF-NG	CH-S09FTXF-NG	CH-S12FTXF-NG	CH-S18FTXF-NG	CH-S24FTXF2-NG
Capacity	Cooling	kW	2.20 (0.37-2.53)	2.50 (0.50-3.35)	3.20 (0.60-3.60)	4.60 (0.65-5.20)	6.20 (1.80-6.90)
	Heating	kW	2.30 (0.51-2.60)	2.80 (0.50-3.30)	3.40 (0.60-3.80)	5.20 (0.70-5.40)	6.50 (1.30-7.03)
Power consumption	Cooling	kW	0.69 (0.16-0.95)	0.78 (0.16-1.40)	0.99 (0.16-1.40)	1.43 (0.16-1.70)	1.83 (0.45-2.20)
	Heating	kW	0.64 (0.20-1.00)	0.78 (0.20-1.50)	0.94 (0.20-1.50)	1.40 (0.20-1.60)	1.92 (0.45-2.30)
Energy efficiency	Cooling (SEER*)	kW/kW	5.1 (A)	6.1 (A++)	6.1 (A++)	6.1 (A++)	6.8 (A++)
	Heating (SCOP**)	kW/kW	3.8 (A)	4.0 (A+)	4.0 (A+)	4.0 (A+)	4.0 (A+)
INDOOR UNIT							
Power supply			~220-240V/50Hz/1 Ph				
Air productivity		m^3/hour	300/430/500/550	330/430/490/550	290/410/480/550	520/610/720/850	400/600/800/900
Sound pressure level		dB (A)	21/25/27/36	23/26/30/37	24/28/32/37	28/33/39/45	29/33/39/45
Drainage		l/hour	0.6	0.8	1.4	1.8	1.8
Weight		kg	8.5	8.5	8.5	13.5	13
OUTDOOR UNIT							
Sound pressure level		dB (A)	49	52	52	54	57
Compressor type			Rotary				
Refrigerant type			R32				
Temperature range for cooling		°C	-15/+43				
Temperature range for heating		°C	-15/+24				
Weight		kg	21.5	29	31	34	36.5
Gas filling volume		kg	0.58	0.6	0.65	0.77	1.23
Liquid line diameter		mm/inch	6.38/1/4"	6.38/1/4"	6.38/1/4"	6.38/1/4"	6.38/1/4"
Gas pipeline diameter		mm/inch	9.53/3/8"	9.53/3/8"	9.53/3/8"	9.53/3/8"	12.7/1/2"
Maximum height difference		m	5	10	10	10	10
Maximum track length		m	15	15	20	20	25

* SEER – seasonal coefficient of system cooling capacity.
** SCOP – seasonal coefficient of system cooling capacity.

INDOOR UNIT

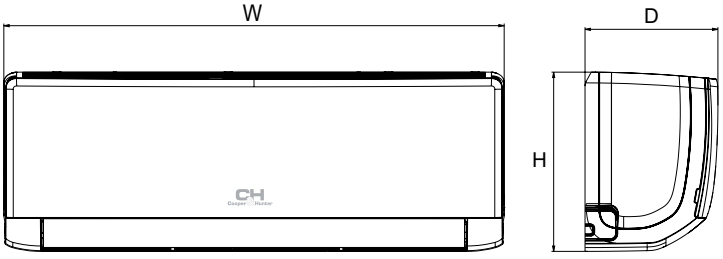

MODEL	W (mm)	H (mm)	D (mm)
CH-S07FTXF-NG	773	250	185
CH-S09FTXF-NG	773	250	185
CH-S12FTXF-NG	773	250	185
CH-S18FTXF-NG	970	300	225
CH-S24FTXK-NG	970	300	225

OUTDOOR UNIT

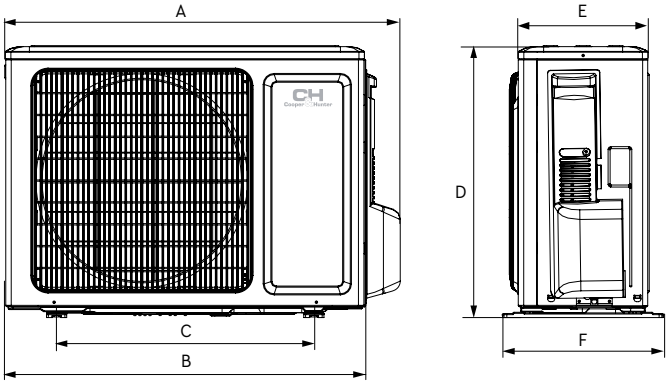

MODEL	A (mm)	B (mm)	C (mm)	D (mm)	E (mm)	F (mm)
CH-S07FTXF-NG	720	660	440	428	257	310
CH-S09FTXF-NG	782	712	510	540	257	320
CH-S12FTXF-NG	842	780	540	596	257	320
CH-S18FTXF-NG	848	780	540	596	257	320
CH-S24FTXF2-NG	873	816	528	555	331	376

MODERN CLASSICS

Cooper&Hunter

SERIES

AIR MASTER INVERTER

The last generation AIR MASTER INVERTER series is an air conditioner that combine the latest HVAC innovations. Exquisite lines with a silver designer platform. I-Action technology guaratntees smooth and stable compressor operation at ultra-low frequencies (1 Hz). Wi-Fi module provides to control via Smartphone / Tablet (OS: Android, iOS).

AIR MASTER

AIR MASTER INVERTER SERIES

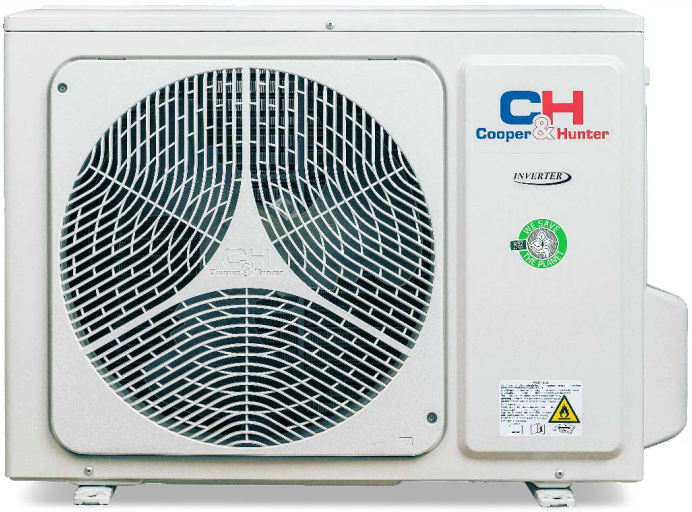

5 YEARS | +43°C | -15°C | 21dB | INVERTER

CE RoHS EAC

FUNCTION

Health

- SLEEP mode
- CH 7-SK technology
- ECO-FRESH
- CH SMART-ION Filter
- Double Self-clean
- Self-clean

Comfort management

- Locking the remote control
- Timer
- LED display
- Turbo mode
- Multi speed fan
- SWING mode
- Dry mode
- Wi-Fi
- I FEEL

Intelligent control

- Anti Freeze protection
- Auto restart
- Self diagnostics

Technological

- R32 Refrigerant
- Silent mide
- Auto protection
- +8°C
- I-Action Technology
- BLUE-FIN
- Warm start

Energy efficiency

- Energy Efficiency
- Generation 6 For 7K, 24K models

MODEL			CH-S07FTXP2-NG	CH-S09FTXP-NG	CH-S12FTXP-NG	CH-S18FTXP-NG	CH-S24FTXP2-NG
Capacity	Cooling	kW	2.20 (0.3-2.85)	2.50 (0.50-3.35)	3.20 (0.60-3.60)	4.60 (0.65-5.20)	6.20 (1.80-6.90)
	Heating	kW	2.40 (0.6-2.90)	2.80 (0.50-3.30)	3.40 (0.60-3.80)	5.20 (0.70-5.40)	6.50 (1.30-7.03)
Power consumption	Cooling	kW	0.59 (0.08-1.10)	0.78 (0.16-1.40)	0.99 (0.16-1.40)	1.43 (0.16-1.70)	1.83 (0.45-2.20)
	Heating	kW	0.59 (0.13-1.30)	0.78 (0.20-1.50)	0.94 (0.20-1.50)	1.40 (0.20-1.60)	1.92 (0.45-2.30)
Energy efficiency	Cooling (SEER*)	kW/kW	6.6 (A++)	6.1 (A++)	6.1 (A++)	6.1 (A++)	6.8 (A++)
	Heating (SCOP**)	kW/kW	4.0 (A+)	4.0 (A+)	4.0 (A+)	4.0 (A+)	4.0 (A+)
INDOOR UNIT							
Power supply			~220-240V/50Hz/1 Ph				
Air productivity		m³/h	250/420/470/500	550/500/430/300	550/480/410/290	850/720/610/520	400/600/800/900
Sound pressure level		dB (A)	21/25/27/36	23/26/30/37	24/28/32/37	28/33/39/45	30/33/39/45
Drainage		l/hour	0.6	0.8	1.4	1.8	1.8
Weight		kg	7.5	8.5	8.5	13.5	13
ЗОВНІШНІЙ БЛОК							
Sound pressure level		dB (A)	50	52	52	54	57
Compressor type			Rotary				
Refrigerant type			R32				
Temperature range for cooling		°C	-15/+43				
Temperature range for heating		°C	-15/+24				
Weight		kg	21	29	31	34	36.5
Gas filling volume		kg	0.45	0.6	0.65	0.77	1.23
Liquid line diameter		mm/inch	6.38/1/4"	6.38/1/4"	6.38/1/4"	6.38/1/4"	6.38/1/4"
Gas pipeline diameter		mm/inch	9.53/3/8"	9.53/3/8"	9.53/3/8"	9.53/3/8"	12.7/1/2"
Maximum height difference		m	10	10	10	10	10
Maximum track length		m	15	15	20	20	25

* SEER – seasonal coefficient of system cooling capacity.
** SCOP – seasonal coefficient of system cooling capacity.

INDOOR UNIT

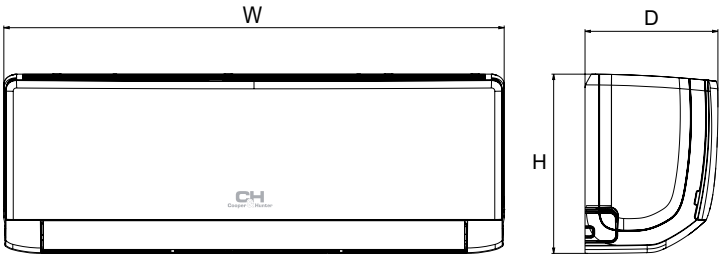

MODEL	W (mm)	H (mm)	D (mm)
CH-S07FTXP2-NG	773	250	185
CH-S09FTXP-NG	773	250	185
CH-S12FTXP-NG	773	250	185
CH-S18FTXP-NG	970	300	225
CH-S24FTXP2-NG	970	300	225

OUTDOOR UNIT

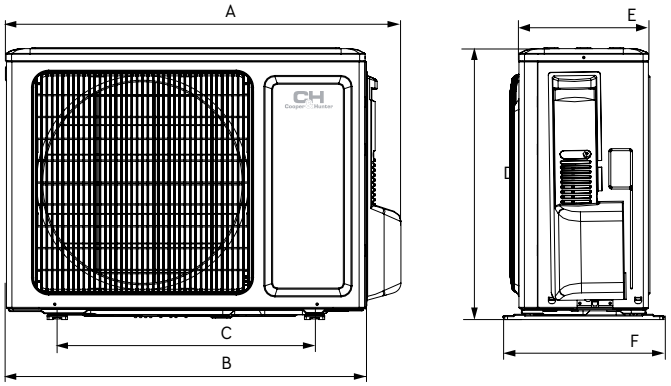

MODEL	A (mm)	B (mm)	C (mm)	D (mm)	E (mm)	F (mm)
CH-S07FTXP2-NG	710	650	430	450	244	293
CH-S09FTXP-NG	782	712	510	540	257	320
CH-S12FTXP-NG	842	780	540	596	257	320
CH-S18FTXP-NG	848	780	540	596	257	320
CH-S24FTXP2-NG	873	816	528	555	331	376

NEW MODEL

Cooper & Hunter

SERIES

COZY INVERTER

COZY INVERTER from C&H with unique DOUBLE SELF-CLEAN technology. It cleans the air, removes fungus and protects the home from bacteria. It allow to save maintenances cost. COZY INVERTER saves your time and money.

COZY INVERTER SERIES

5 YEARS | +43°C | −15°C | 20dB | INVERTER

CE RoHS EAC

FUNCTION

Health	Comfort management

SLEEP mode · CH 7-SK technology · ECO-FRESH · CH SMART-ION Filter · Double Self-clean · Self-clean · Locking the remote control · Timer · LED display · Turbo mode · Multi speed fan · SWING mode · Dry mode · Wi-Fi · I FEEL

Intelligent control	Technological	Energy efficiency

Anti Freeze protection · Auto restart · Self diagnostics · R32 Refrigerant · Silent mide · Auto protection · +8°C · I-Action Technology · BLUE-FIN · Warm start · Energy Efficiency · Generation 6 For 7K, 24K models

MODEL			CH-S07FTXK-NG	CH-S09FTXK-NG	CH-S12FTXK-NG	CH-S18FTXK-NG	CH-S24FTXK-NG
Capacity	Cooling	kW	2.20 (0.3-2.85)	2.50 (0.5-3.25)	3.20 (0.9-3.60)	4.60 (1.00-5.30)	6.20 (1.80-6.90)
	Heating	kW	2.40 (0.6-2.90)	2.80 (0.5-3.50)	3.40 (0.9-4.00)	5.20 (1.00-5.65)	6.50 (1.30-7.03)
Power consumption	Cooling	kW	0.59 (0.08-1.10)	0.72 (0.15-1.30)	0.99 (0.22-1.30)	1.36 (0.42-1.80)	1.83 (0.45-2.20)
	Heating	kW	0.59 (0.13-1.30)	0.75 (0.14-1.50)	0.92 (0.22-1.50)	1.34 (0.42-1.90)	1.92 (0.45-2.30)
Energy efficiency	Cooling (SEER*)	kW/kW	6.6 (A++)	6.5 (A++)	6.1 (A++)	6.4 (A++)	6.8 (A++)
	Heating (SCOP**)	kW/kW	4.0 (A+)	4.0 (A+)	4.0 (A+)	4.0 (A+)	4.0 (A+)
INDOOR UNIT							
Power supply			~220-240V/50Hz/1 Ph				
Air productivity		m^3/hour	250/420/470/500	270/390/470/500	320/400/520/590	600/700/800/850	400/600/800/900
Sound pressure level		dB (A)	20/24/26/36	21/25/27/36	21/26/31/37	27/32/39/46	30/33/39/45
Drainage		l/hour	0.6	1.4	1.4	1.8	1.8
Weight		kg	7.5	7.5	8.5	13.5	13
OUTDOOR UNIT							
Sound pressure level		dB (A)	50	51	51	55	57
Compressor type			Rotary				
Refrigerant type			R-32				
Temperature range for cooling		°C	-15...+43				
Temperature range for heating		°C	-15...+24				
Weight		kg	21	25	25	26.5	36.5
Gas filling volume		kg	0.45	0.50	0.55	0.75	1.23
Liquid line diameter		mm/inch	6.38/1/4"	6.38/1/4"	6.38/1/4"	6.38/1/4"	6.38/1/4"
Gas pipeline diameter		mm/inch	9.53/3/8"	9.53/3/8"	9.53/3/8"	9.53/3/8"	12.7/1/2"
Maximum height difference		m	10	10	10	10	10
Maximum track length		m	15	15	15	25	25

* SEER – seasonal coefficient of system cooling capacity.
** SCOP – seasonal coefficient of system cooling capacity.

INDOOR UNIT

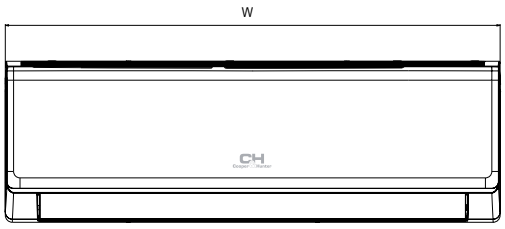

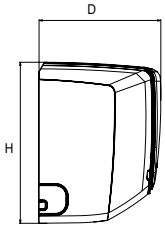

MODEL	W (mm)	H (mm)	D (mm)
CH-S07FTXK-NG	696	251	190
CH-S09FTXK-NG	696	251	190
CH-S12FTXK-NG	770	251	190
CH-S18FTXK-NG	972	300	225
CH-S24FTXK-NG	972	300	225

OUTDOOR UNIT

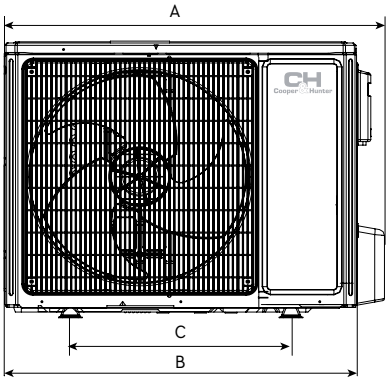

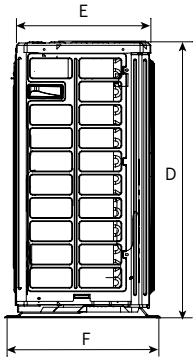

MODEL	A (mm)	B (mm)	C (mm)	D (mm)	E (mm)	F (mm)
CH-S07FTXK-NG	710	650	430	450	244	293
CH-S09FTXK-NG	732	675	455	550	285	330
CH-S12FTXK-NG	732	675	455	550	285	330
CH-S18FTXK-NG	732	675	455	550	285	330
CH-S24FTXK-NG	873	816	528	555	331	376

Cooper & Hunter

SERIES

INVERTER CONSOLE NG

CONSOLE

The innovative and compact unit, mounted on the floor or on the wall, fits perfectly under the window. Conditioners have the ability to supply air up, or up and down.

INVERTER CONSOLE NG SERIES

5 YEARS | +43°C | −25°C | 22dB | INVERTER

CE RoHS EAC

FUNCTION

Health				Comfort management								
SLEEP mode	ECO-FRESH	CH SMART-ION Filter	Self-clean	Locking the remote control	Timer	LED display	Turbo mode	Multi speed fan	SWING mode	Dry mode	Wi-Fi	I FEEL

Intelligent control				Technological							Energy efficiency	
Anti Freeze protection	Auto restart	Self diagnostics	Wired controller connection	R32 Refrigerant	Silent mide	Auto protection	+8°C	I-Action Technology	BLUE-FIN	Warm start	Energy Efficiency	Generation 6 For 7K, 24K models

CONTROLS AND ACCESSORIES (OPTIONAL)

Remote Controller YAG1FB2 (WiFi). For 24K model

Wired Controller XK76

Wired Controller CE50-24/E

Wired Controller CE52-24/F

MODEL			CH-S09FVX-NG	CH-S12FVX-NG	CH-S18FVX-NG
Capacity	Cooling	kW	2.70 (0.70–3.40)	3.52 (0.80–4.40)	5.20 (1.26–6.60)
	Heating	kW	2.90 (0.60–3.50)	3.80 (1.10–4.40)	5.33 (1.12–6.68)
Power consumption	Cooling	kW	0.72 (0.17–1.30)	1.00 (0.16–1.50)	1.55 (0.38–2.45)
	Heating	kW	0.73 (0.13–1.35)	0.96 (0.17–1.50)	1.50 (0.35–2.50)
Energy efficiency	Cooling (SEER*)	kW/kW	7.2 (A++)	7.0 (A++)	6.6 (A++)
	Heating (SCOP**)	kW/kW	5.3 (A+++)	5.3 (A+++)	5.1 (A+++)
INDOOR UNIT					
Power supply			~220-240V/50Hz/1 Ph		
Air productivity		m³/hour	250/280/330/370/410/430/500	280/360/400/440/480/520/600	320/410/460/520/580/650/700
Sound pressure level		dB (A)	22/25/28/30/32/36/38	24/29/33/36/38/40/44	28/31/35/37/40/45/47
Drainage		l/hour	0.8	1.2	1.8
Weight		kg	15.5	15.5	15.5
OUTDOOR UNIT					
Sound pressure level		dB (A)	49	52	57
Compressor type				Rotary	
Refrigerant type				R32	
Temperature range for cooling		°C		-15 ... +43	
Temperature range for heating		°C		-25 ... +24	
Weight		kg	27.5	30.5	46
Gas filling volume		kg	0.55	0.75	0.95
Liquid line diameter		mm/inch	6.38/1/4"	6.38/1/4"	6.38/1/4"
Gas pipeline diameter		mm/inch	9.53/3/8"	9.53/3/8"	12.7/1/2"
Maximum height difference		m	10	10	10
Maximum track length		m	20	20	25

* SEER – seasonal coefficient of system cooling capacity.
** SCOP – seasonal coefficient of system cooling capacity.

INDOOR UNIT

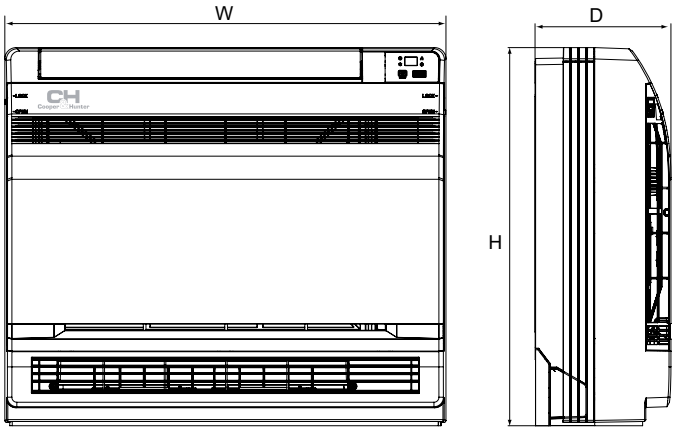

MODEL	W (mm)	H (mm)	D (mm)
CH-S09FVX-NG	700	600	215
CH-S12FVX-NG	700	600	215
CH-S18FVX-NG	700	600	215

ЗОВНІШНІЙ БЛОК

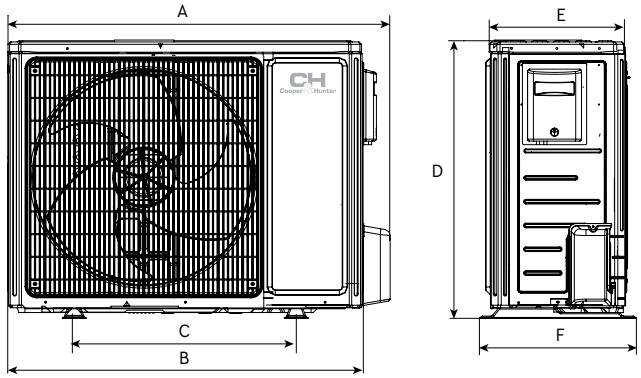

MODEL	A (mm)	B (mm)	C (mm)	D (mm)	E (mm)	F (mm)
CH-S09FVX-NG	782	712	510	540	257	320
CH-S12FVX-NG	848	780	540	596	257	320
CH-S18FVX-NG	963	892	560	700	341	396

NEW MODEL

Cooper & Hunter

SERIES

UNIVERSAL PRO

The first ON-OFF air conditioner that heats your home during cold in winter. UNIVERSAL PRO heats stable down to -15 ° C. Budget price - cares of your wallet, reliable system - cares of your house.

UNIVERSAL PRO SERIES

5 POKIB | +43°C | −15°C | 21dB | ON/OFF

CE RoHS EAC

FUNCTION

Health

SLEEP mode | CH 7-SK technology | ECO-FRESH | CH SMART-ION Filter | Double Self-clean | Self-clean

Comfort management

Locking the remote control | Timer | LED display | Turbo mode | Multi speed fan | Dry mode | I FEEL

Intelligent control

Anti Freeze protection | Auto restart | Self diagnostics

Technological

R410a Refrigerant | Silent mide | Auto protection | +8°C | I-Action Technology | BLUE-FIN | Warm start

Energy efficiency

Energy Efficiency | Generation 6 For 7K, 24K models

MODEL			CH-S07XZ3	CH-S09XZ3	CH-S12XZ3	CH-S18XZ3	CH-S24XZ3	CH-S30XZ3
Capacity	Cooling	kW	2.25	2.55	3.25	4.80	6.16	8.50
	Heating	kW	2.30	2.65	3.40	5.16	6.70	8.90
Power consumption	Cooling	kW	0.70	0.79	1.01	1.48	1.92	2.62
	Heating	kW	0.64	0.73	0.94	1.43	1.86	2.47
INDOOR UNIT								
Power supply			~220-240V/50Hz/1 Ph					
Air productivity		m^3/hour	250/420/470/520	250/420/470/520	300/320/400/520/590	340/370/410/480/530/590/650	540/590/690/840/900	820/980/1100/1250
Sound pressure level		dB (A)	21/25/30/37	23/26/31/37	25/28/32/34/37	29/31/33/35/38/40	31/34/37/42/45	35/40/43/45
Drainage		l/hour	0.6	0.8	1.6	1.8	1.8	3.0
Weight		kg	7.5	7.7	8.5	10.8	13.6	16.9
OUTDOOR UNIT								
Sound pressure level		dB (A)	49	49	52	53	55	60
Compressor type			Rotary					
Refrigerant type			R-410A					
Temperature range for cooling		°C	18...+43					
Temperature range for heating		°C	-15...+24					
Weight		kg	22.3	24.7	28	38.5	43	56.9
Gas filling volume		kg	0.55	0.56	0.73	1.00	1.28	1.9
Liquid line diameter		mm/inch	6.38/1/4"	6.38/1/4"	6.38/1/4"	6.38/1/4"	6.38/1/4"	6.38/1/4"
Gas pipeline diameter		mm/inch	9.53/3/8"	9.53/3/8"	12.7/1/2"	12.7/1/2"	12.7/1/2"	15.88/5/8"
Maximum height difference		m	10	10	10	10	10	10
Maximum track length		m	15	15	20	25	25	30

* SEER – seasonal coefficient of system cooling capacity.
** SCOP – seasonal coefficient of system cooling capacity.

INDOOR UNIT

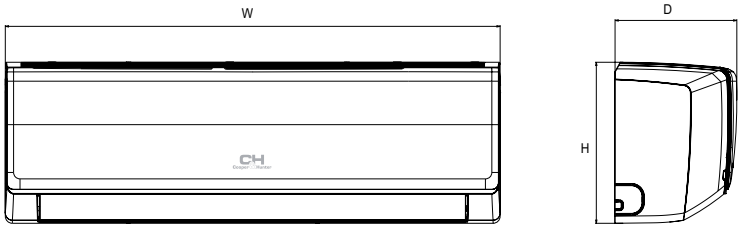

MODEL	W (mm)	H (mm)	D (mm)
CH-S07XZ3	704	260	185
CH-S09XZ3	704	260	185
CH-S12XZ3	779	260	185
CH-S18XZ3	825	293	196
CH-S24XZ3	982	311	221
CH-S30XZ3	1075	333	246

OUTDOOR UNIT

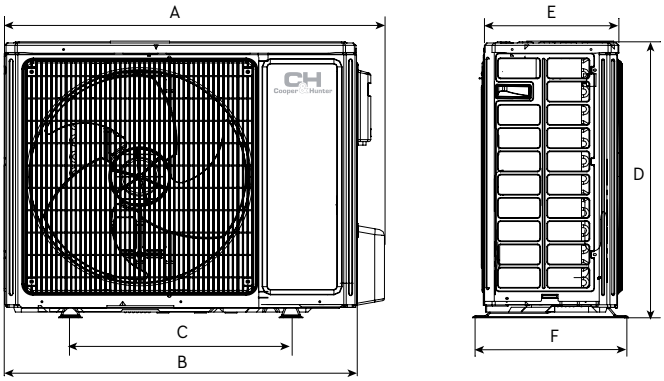

MODEL	A (mm)	B (mm)	C (mm)	D (mm)	E (mm)	F (mm)
CH-S07XZ3	710	650	430	450	244	293
CH-S09XZ3	710	650	430	450	244	293
CH-S12XZ3	732	675	455	555	285	330
CH-S18XZ3	802	745	513	555	300	350
CH-S24XZ3	873	816	528	555	331	376
CH-S30XZ3	958	889	570	660	340	402

PRIMA PLUS SERIES

5 POKIB | +43°C | −15°C | 22dB | ON/OFF

CE RoHS EAC

FUNCTION

Health

- SLEEP mode
- CH 7-SK technology
- ECO-FRESH
- CH SMART-ION Filter
- Double Self-clean
- Self-clean

Comfort management

- Locking the remote control
- Timer
- LED display
- Turbo mode
- Multi speed fan
- Dry mode
- I FEEL

Intelligent control

- Anti Freeze protection
- Auto restart
- Self diagnostics

Technological

- R410a Refrigerant
- Silent mide
- Auto protection
- +8°C
- I-Action Technology
- BLUE-FIN
- Warm start

Energy efficiency

- Energy Efficiency
- Generation 6 For 7K, 24K models

MODEL			CH-S07XN8	CH-S09XN8	CH-S12XN8	CH-S18XN8	CH-S24XN8	CH-S30XN8
Capacity	Cooling	kW	2.25	2.55	3.25	4.80	6.16	8.50
	Heating	kW	2.30	2.65	3.40	5.16	6.70	8.90
Power consumption	Cooling	kW	0.70	0.79	1.01	1.48	1.92	2.62
	Heating	kW	0.64	0.73	0.94	1.43	1.86	2.47
INDOOR UNIT								
Power supply			~220-240V/50Hz/1 Ph					
Air productivity		m³/hour	250/420/470/520	250/420/470/520	300/320/400/520/590	340/370/410/480/530/590/650	540/590/690/840/900	820/980/1100/1250
Sound pressure level		dB (A)	22/25/30/37	23/26/31/37	25/28/32/34/37	29/31/33/35/38/40	31/34/37/42/45	35/40/43/45
Drainage		l/h	0.6	0.8	1.6	1.8	1.8	3.0
Weight		kg	7.5	7.7	8.5	10.8	13.6	16.9
OUTDOOR UNIT								
Sound pressure level		dB (A)	49	49	52	53	55	60
Compressor type			Rotary					
Refrigerant type			R-410A					
Temperature range for cooling		°C	18...+43					
Temperature range for heating		°C	-15...+24					
Weight		kg	22.3	24.7	28	38.5	43	56.9
Gas filling volume		kg	0.55	0.56	0.73	1.00	1.28	1.9
Liquid line diameter		mm/inch	6.38/1/4"	6.38/1/4"	6.38/1/4"	6.38/1/4"	6.38/1/4"	6.38/1/4"
Gas pipeline diameter		mm/inch	9.53/3/8"	9.53/3/8"	12.7/1/2"	12.7/1/2"	12.7/1/2"	15.88/5/8"
Maximum height difference		m	10	10	10	10	10	10
Maximum track length		m	15	15	20	25	25	30

* SEER – seasonal coefficient of system cooling capacity.
** SCOP – seasonal coefficient of system cooling capacity.

INDOOR UNIT

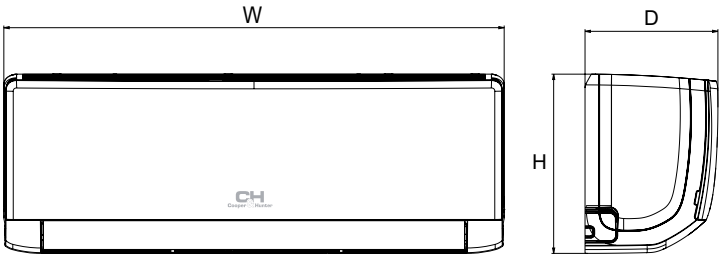

MODEL	W (mm)	H (mm)	D (mm)
CH-S07XN8	704	260	185
CH-S09XN8	704	260	185
CH-S12XN8	779	260	185
CH-S18XN8	825	293	196
CH-S24XN8	982	311	221
CH-S30XN8	1075	333	246

OUTDOOR UNIT

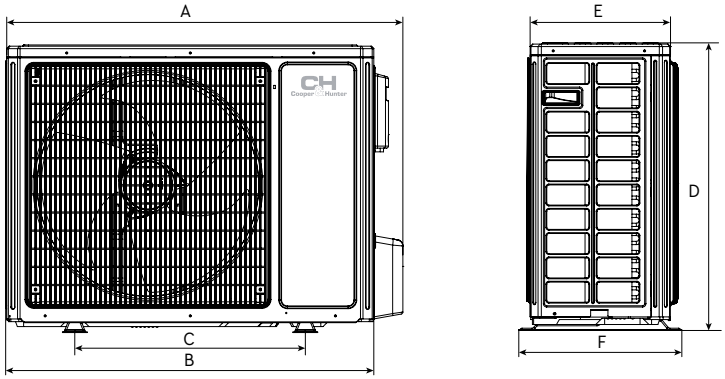

MODEL	A (mm)	B (mm)	C (mm)	D (mm)	E (mm)	F (mm)
CH-S07XN8	710	650	430	450	244	293
CH-S09XN8	710	650	430	450	244	293
CH-S12XN8	732	675	455	555	285	330
CH-S18XN8	802	745	513	555	300	350
CH-S24XN8	873	816	528	555	331	376
CH-S30XN8	958	889	570	660	340	402

AIR MASTER EVO SERIES

5 YEARS | +43°C | -15°C | 22dB | ON/OFF

CE RoHS EAC

FUNCTION

Health						Comfort management						
SLEEP mode	CH 7-SK technology	ECO-FRESH	CH SMART-ION Filter	Double Self-clean	Self-clean	Locking the remote control	Timer	LED display	Turbo mode	Multi speed fan	Dry mode	I FEEL

Intelligent control			Technological							Energy efficiency	
Anti Freeze protection	Auto restart	Self diagnostics	R410a Refrigerant	Silent mide	Auto protection	+8°C	I-Action Technology	BLUE-FIN	Warm start	Energy Efficiency	Generation 6 For 7K, 24K models

MODEL			CH-S07XP10	CH-S09XP10	CH-S12XP10	CH-S18XP10	CH-S24XP10	CH-S30XP10
Capacity	Cooling	kW	2.25	2.55	3.25	4.80	6.16	8.50
	Heating	kW	2.30	2.65	3.40	5.16	6.70	8.90
Power consumption	Cooling	kW	0.70	0.79	1.01	1.48	1.92	2.62
	Heating	kW	0.64	0.73	0.94	1.43	1.86	2.47
INDOOR UNIT								
Power supply			~220-240V/50Hz/1 Ph					
Air productivity		m³/hour	250/420/470/520	250/420/470/520	300/320/400/520/590	340/370/410/480/530/590/650	540/590/690/840/900	820/980/1100/1250
Sound pressure level		dB (A)	22/25/30/37	23/26/31/37	25/28/32/34/37	29/31/33/35/38/40	31/34/37/42/45	35/40/43/45
Drainage		l/hour	0.6	0.8	1.6	1.8	1.8	3.0
Weight		kg	7.5	7.7	8.5	10.8	13.6	16.9
OUTDOOR UNIT								
Sound pressure level		dB (A)	49	49	52	53	55	60
Compressor type			Rotary					
Refrigerant type			R-410A					
Temperature range for cooling		°C	18...+43					
Temperature range for heating		°C	-15...+24					
Weight		kg	22.3	24.7	28	38.5	43	56.9
Gas filling volume		kg	0.55	0.56	0.73	1.00	1.28	1.9
Liquid line diameter		mm/inch	6.38/1/4"	6.38/1/4"	6.38/1/4"	6.38/1/4"	6.38/1/4"	6.38/1/4"
Gas pipeline diameter		mm/inch	9.53/3/8"	9.53/3/8"	12.7/1/2"	12.7/1/2"	12.7/1/2"	15.88/5/8"
Maximum height difference		m	10	10	10	10	10	10
Maximum track length		m	15	15	20	25	25	30

INDOOR UNIT

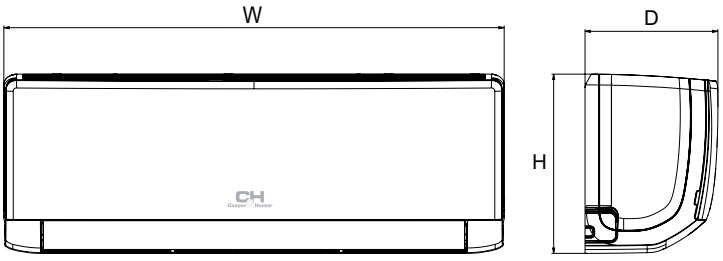

MODEL	W (mm)	H (mm)	D (mm)
CH-S07XP10	704	260	185
CH-S09XP10	704	260	185
CH-S12XP10	779	260	185
CH-S18XP10	825	293	196
CH-S24XP10	982	311	221
CH-S30XP10	1075	333	246

OUTDOOR UNIT

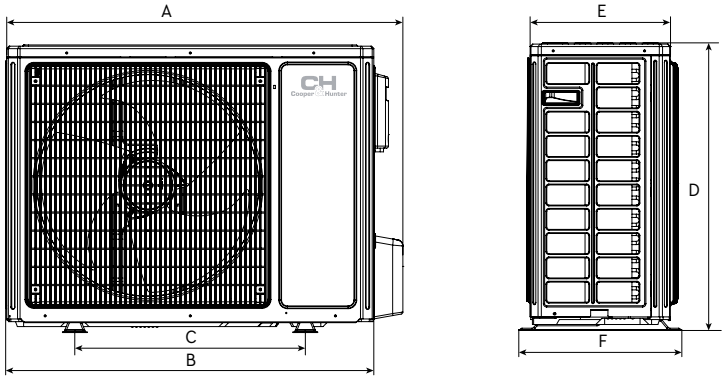

МОДЕЛЬ	A (mm)	B (mm)	C (mm)	D (mm)	E (mm)	F (mm)
CH-S07XP10	710	650	430	450	244	293
CH-S09XP10	710	650	430	450	244	293
CH-S12XP10	732	675	455	555	285	330
CH-S18XP10	802	745	513	555	300	350
CH-S24XP10	873	816	528	555	331	376
CH-S30XP10	958	889	570	660	340	402

AIR MASTER POWER SERIES

5 YEARS

+43°C

–7°C

ON/OFF

CE RoHS EAC

FUNCTION

Health

- SLEEP mode
- CH 7-SK technology
- ECO-FRESH
- CH SMART-ION Filter
- Double Self-clean
- Self-clean

Comfort management

- Locking the remote control
- Timer
- LED display
- Turbo mode
- Multi speed fan
- Dry mode
- I FEEL

Intelligent control

- Anti Freeze protection
- Auto restart
- Self diagnostics

Technological

- R410a Refrigerant
- Silent mide
- Auto protection
- +8°C
- I-Action Technology
- BLUE-FIN
- Warm start

Energy efficiency

- Energy Efficiency
- Generation 6

MODEL			CH-S36XL9
Capacity	Cooling	kW	9.5
	Heating	kW	9.8
Power consumption	Cooling	kW	2.86
	Heating	kW	2.71
INDOOR UNIT			
Power supply			~220-240V/50Hz/1 Ph
Air productivity		m^3/hour	1250
Sound pressure level		dB (A)	41/42/47
Drainage		l/hour	3.5
Weight		kg	16.5
OUTDOOR UNIT			
Sound pressure level		dB (A)	55
Compressor type			Rotary
Refrigerant type			R410A
Temperature range for cooling		°C	+18/+43
Temperature range for heating		°C	-7/+24
Weight		kg	67
Gas filling volume		kg	2.05
Liquid line diameter		mm/inch	6.38/1/4''
Gas pipeline diameter		mm/inch	15.88/5/8''
Maximum height difference		m	10
Maximum track length		m	30

INDOOR UNIT

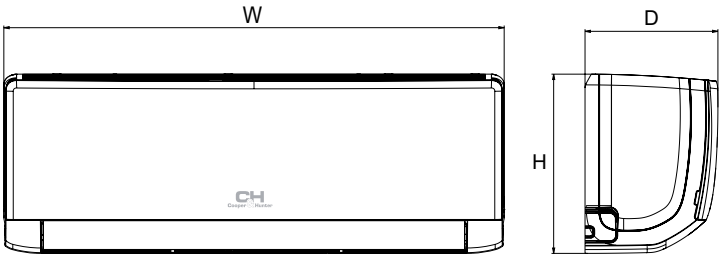

MODEL	W (mm)	H (mm)	D (mm)
CH-S36XL9	1078	325	246

OUTDOOR UNIT

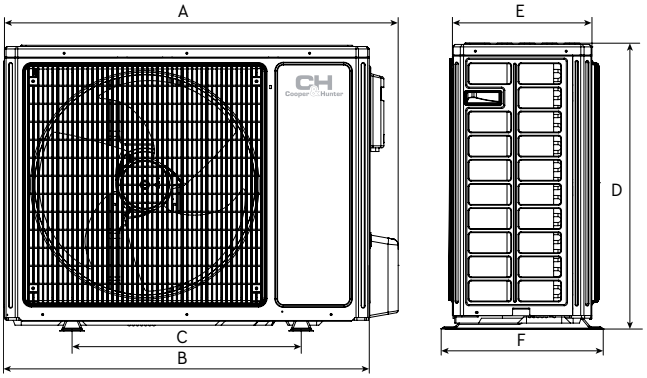

МОДЕЛЬ	A (mm)	B (mm)	C (mm)	D (mm)	E (mm)	F (mm)
CH-S36XL9	980	920	610	790	370	427

PORTABLE AIR CONDITIONER

FUNCTION

Health	Intelligent control	Technological	Energy efficiency

SLEEP mode · ECO-FRESH · Timer · LED display · Dry mode · Wi-Fi · Auto protection · BLUE-FIN · R290 FREON · Energy Efficiency · Generation 5

MODEL			CH-M09K6S-WF	CH-M12K7S-WF
Capacity	Cooling	kW	2.60	3.40
	Heating	kW	-	2.70
Power consumption	Cooling	kW	1.00	1.31
	Heating	kW	-	1.04
Energy efficiency	Cooling (SEER*)	kW/kW	2.60	2.60
	Heating (SCOP**)	kW/kW	-	2.60
Power supply			~220-240V/50Hz/1 Ph	
Air productivity		m^3/hour	260/290/320	300/330/360
Sound pressure level		dB (A)	49/51/53	49/51/53
Refrigerant type			R290	
Gas filling volume		kg	0.195	0.2
Weight		kg	25.5	35.5
Compressor type			Rotary	
Temperature range for cooling		°C	+16...+35	
Temperature range for heating		°C	-	+10...+27

* SEER - seasonal coefficient of system cooling capacity.
** SCOP - seasonal coefficient of system cooling capacity.

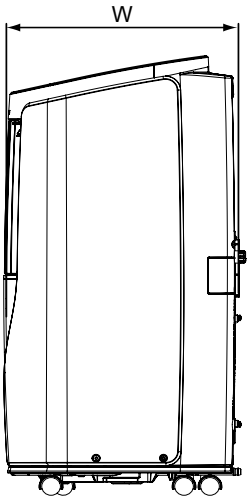

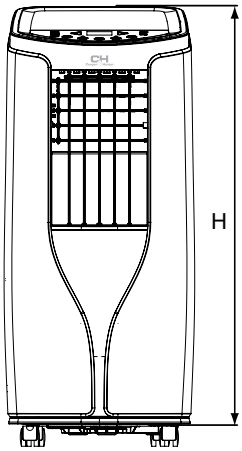

MODEL	W (mm)	H (mm)	D (mm)
CH-M09K6S-WF	315	770	395
CH-M12K7S-WF	390	820	405

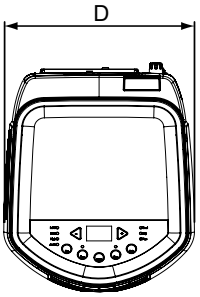

FUNCTION

Health	Intelligent control	Technological	Energy efficiency

SLEEP mode · ECO-FRESH · Timer · LED display · Dry mode · Wi-Fi · I FEEL · Auto protection · BLUE-FIN · Silent mide · R290 FREON · Energy Efficiency · Generation 5

MODEL			CH-M08MC
Capacity	Cooling	kW	2.05
Power consumption	Cooling	kW	0.785
Energy efficiency	Cooling (EER)	kW/kW	2.6
Power supply			~220-240V/50Hz/1 Ph
Air productivity		m^3/hour	290
Sound pressure level		dB (A)	63
Refrigerant type			R290
Gas filling volume		kg	0.21
Weight		kg	21
Compressor type			Rotary

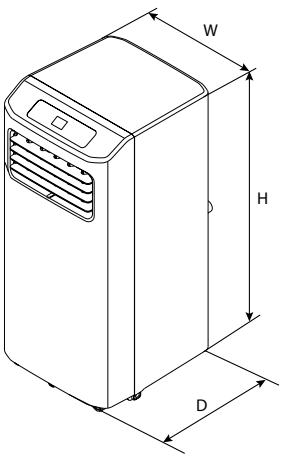

MODEL	W (mm)	H (mm)	D (mm)
CH-M08MC	300	670	330

Cooper&Hunter

MULTI-SPLIT SYSTEM

NORDIC MULTI LIGHT is a free-standing DC inverter multi-split system that allows you to connect from one to five indoor units of different types to one outdoor unit.

NORDIC MULTI LIGHT SERIES

5 YEARS | -22°C | +48°C | INVERTER | CE | RoHS | EAC

FUNCTION

Intelligent control					Technological							Energy efficiency	
Anti Freeze protection	Auto restart	Self diagnostics	BMS connection	Wired controller connection	R32 Refrigerant	Multisplit	Auto protection	+8°C	I-Action Technology	BLUE-FIN	Warm start	Energy Efficiency	Generation 6

CONTROLS AND ACCESSORIES (OPTIONAL)

Wired Controller
XK76

Wired Controller
CE50-24/E

Wired Controller
CE52-24/F

THE OUTDOOR UNITS HAVE THE CAPACITY FROM 14 000 TO 42 000 BTU

MODEL			CHML-U14RK2-NG	CHML-U18RK2-NG	CHML-U21RK3-NG	CHML-U24RK3-NG	CHML-U28RK4-NG	CHML-U36RK4	CHML-U42RK5
Number of the connected indoor units			1-2	1-2	2-3	2-3	2-4	2-4	2-5
Capacity	Cooling	kW	4.1	5.3	6.1	7.1	8.0	10.5	12.0
	Heating	kW	4.4	5.65	6.5	8.6	9.5	12.0	12.0
Power supply			~220-240V/50Hz/1 Ph						
Air productivity		m^3/h	2300	2300	3800	3800	3800	5500	5500
Sound pressure level		dB (A)	52	54	58	58	58	60	60
Dimensions (WxDxH)		mm	745x300x550	745x300x550	964×402×660	964×402×660	964×402×660	1087×1103×440	1087×1103×440
Weight		kg	30/32.5	32/34.5	47.5/52	47.5/52	51/55.5	90/98	90/98
Refrigerant type			R32						
Temperature range	cooling	°C	-15/+43					-5/+48	
	heating	°C	-22/+20					-15/+27	
Pipeline maximum lenght		m	40/20	40/20	60/20	60/20	70/20	75/25	75/25
Maximum pipeline elevation difference (between indoor and outdoor))		m	5	5	10	10	10	7.5	7.5
Distance between the fastening bolts of the outdoor unit		mm	512	512	570	570	570	631	631

DIMENSIONS

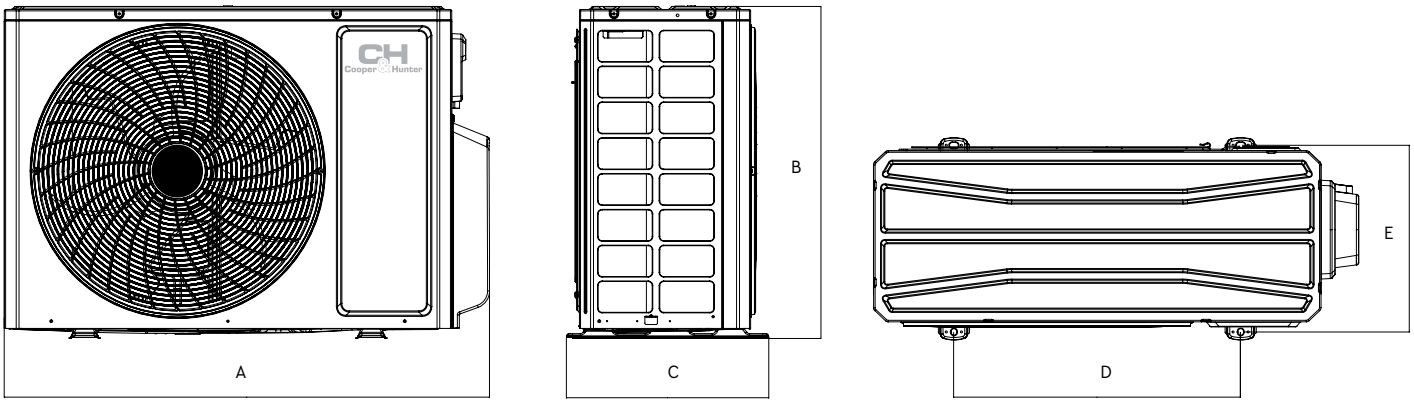

MODEL	A (mm)	B (mm)	C (mm)	D (mm)	E (mm)
CHML-U14RK2-NG	822	550	352	512	332
CHML-U18RK2-NG	822	550	352	512	332
CHML-U21RK3-NG	964	660	402	570	371
CHML-U24RK3-NG	964	660	402	570	371
CHML-U284RK4-NG	964	660	402	570	371
CHML-U36RK4	1087	1103	440	631	401
CHML-U42RK5	1087	1103	440	631	401

SUPREME CONTINTAL SERIES

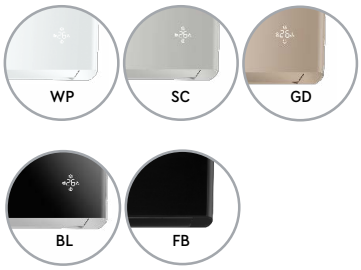

5 YEARS 18dB

CE RoHS EAC

SPECIFICATIONS

MODEL			CH-S09FTXAL-GD (I) CH-S09FTXAL-SC (I) CH-S09FTXAL-BL (I) CH-S09FTXAL-WP (I) CH-S09FTXAL-FB (I)	CH-S12FTXAL-GD (I) CH-S12FTXAL-SC (I) CH-S12FTXAL-BL (I) CH-S12FTXAL-WP (I) CH-S12FTXAL-FB (I)	CH-S18FTXAL-GD (I) CH-S18FTXAL-SC (I) CH-S18FTXAL-BL (I) CH-S18FTXAL-WP (I) CH-S18FTXAL-FB (I)	CH-S24FTXAL-GD (I) CH-S24FTXAL-SC (I) CH-S24FTXAL-BL (I) CH-S24FTXAL-WP (I) CH-S24FTXAL-FB (I)
Capacity	Cooling	kW	2.70	3.50	5.30	7.00
	Heating	kW	2.93	3.81	5.57	7.20
Power supply			~220-240V/50Hz/1 Ph			
Air productivity		m^3/h	390/420/450/490/540/590/660	390/420/450/490/540/590/680	306/520/580/610/750/800/850	750/850/900/950/1000/1100/1250
Sound pressure level		dB (A)	18/22/26/35/37/39/41	19/24/28/35/37/39/43	30/33/36/41/43/45/49	32/35/38/42/44/47/49
Drainage		l/h	0.8	1.4	1.8	2.4
Weight		kg	10.5	11	13.5	16.5

FUNCTION

Health					Comfort management								
SLEEP mode	CH 7-SK technology	ECO-FRESH	CH SMART-ION Filter	Self-clean	Locking the remote control	Timer	LED display	Turbo mode	Multi speed fan	SWING mode	Dry mode	Wi-Fi	I FEEL

DIMENSIONS

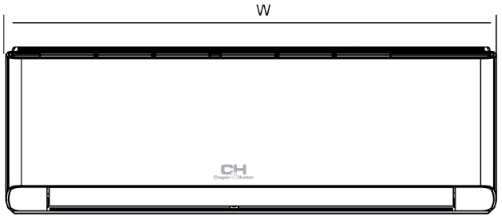

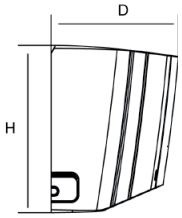

MODEL	W (mm)	H (mm)	D (mm)
CH-S09FTXAL-GD/SC/BL/WP/FB (I)	865	290	210
CH-S12FTXAL-GD/SC/BL/WP/FB (I)	865	290	210
CH-S18FTXAL-GD/SC/BL/WP/FB (I)	996	301	225
CH-S24FTXAL-GD/SC/BL/WP/FB (I)	1101	327	249

DAYTONA SERIES

5 YEARS · 18dB

CE RoHS EAC

SPECIFICATIONS

MODEL			CH-S09FTXD2-WP (I) CH-S09FTXD2-BL (I) CH-S09FTXD2-SC (I)	CH-S12FTXD2-WP (I) CH-S12FTXD2-BL (I) CH-S12FTXD2-SC (I)	CH-S18FTXD2-WP (I) CH-S18FTXD2-BL (I) CH-S18FTXD2-SC (I)	CH-S24FTXD2-WP (I) CH-S24FTXD2-BL (I) CH-S24FTXD2-SC (I)
Capacity	Cooling	kW	2.70	3.51	5.20	7.10
	Heating	kW	3.00	3.81	5.60	7.80
Power supply			~ 220-240В/50Гц/1Ф			
Air productivity		m^3/h	390/420/440/470/540/570/610	390/420/450/490/560/620/680	470/520/570/610/650/720/800	800/850/900/950/1000/1100/1250
Sound pressure level		dB (A)	18/22/24/26/30/34/37	19/22/24/27/32/35/38	24/27/30/34/38/40/45	26/28/35/37/39/42/47
Drainage		l/h	0.80	1.40	1.9	2.4
Weight		kg	11	11	13.5	17.5

FUNCTION

Health

- SLEEP mode
- CH 7-SK technology
- ECO-FRESH
- CH SMART-ION Filter
- Double Self-clean
- Self-clean

Comfort management

- Locking the remote control
- Timer
- LED display
- Turbo mode
- Multi speed fan
- SWING mode
- Dry mode
- Wi-Fi
- I FEEL

DIMENSIONS

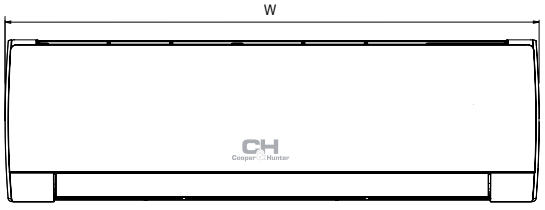

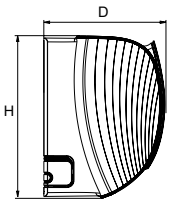

MODEL	W (мм)	H (мм)	D (мм)
CH-S09FTXD2-WP/BL/SC (I)	894	291	211
CH-S12FTXD2-WP/BL/SC (I)	894	291	211
CH-S18FTXD2-WP/BL/SC (I)	1017	304	221
CH-S24FTXD2-WP/BL/SC (I)	1135	328	247

VERITAS NG SERIES

5 YEARS

20dB

CE RoHS EAC

SPECIFICATION

MODEL			CH-S07FTXQ2-NG (I)	CH-S09FTXQ-NG (I)	CH-S12FTXQ-NG (I)	CH-S18FTXQ-NG	CH-S24FTXQ2-NG
Capacity	Cooling	kW	2.35 (0.37-2.53)	2.60 (0.50-3.35)	3.50 (0.60-3.60)	5.00 (0.65-5.20)	7.10 (2.00-8.85)
	Heating	kW	2.50 (0.51-2.60)	2.80 (0.50-3.30)	3.60 (0.60-3.80)	5.30 (0.70-5.40)	7.80 (1.80-9.45)
Power supply			~220-240V/50Hz/1 Ph				
Air productivity		m^3/h	300/390/420/500	330/430/490/560	290/410/480/560	520/610/720/850	800/850/900/950/1050/1150/1250
Sound pressure level		dB (A)	20/22/25/29/38	23/26/30/36	24/28/32/37	28/33/39/45	27/29/35/37/39/42/47
Drainage		l/h	0.8	0.8	1.4	1.8	2.4
Weight		kg	8.2	9	9	13.5	16

FUNCTION

Health						Comfort management								
SLEEP mode	CH 7-SK technology	ECO-FRESH	CH SMART-ION Filter	Double Self-clean	Self-clean	Locking the remote control	Timer	LED display	Turbo mode	Multi speed fan	SWING mode	Dry mode	Wi-Fi	I FEEL

DIMENSIONS

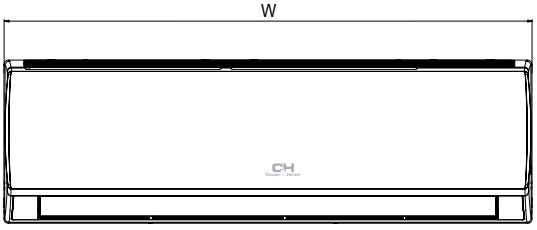

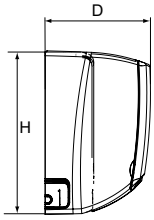

MODEL	W (mm)	H (mm)	D (mm)
CH-S09FTXAM2S-GD/WP/SC/BL (I)	996	301	225
CH-S12FTXAM2S-GD/WP/SC/BL (I)	996	301	225
CH-S18FTXAM2S-GD/WP/SC/BL (I)	1101	327	249
CH-S24FTXAM2S-GD/WP/SC/BL (I)	1101	327	249

VITAL INVERTER SERIES

5 YEARS

21dB

CE RoHS EAC

SPECIFICATION

MODEL			CH-S07FTXF-NG (I)	CH-S09FTXF-NG (I)	CH-S12FTXF-NG (I)	CH-S18FTXF-NG (I)	CH-S24FTXF2-NG (I)
Capacity	Cooling	kW	2.20	2.50	3.20	4.60	6.20
	Heating	kW	2.30	2.80	3.40	5.20	6.50
Power supply			~220-240V/50Hz/1 Ph				
Air productivity		m^3/h	300/430/500/550	330/430/490/550	290/410/480/550	520/610/720/850	400/600/800/900
Sound pressure level		dB (A)	21/25/27/36	23/26/30/37	24/28/32/37	28/33/39/45	29/33/39/45
Drainage		l/h	0.6	0.8	1.4	1.8	1.8
Weight		kg	8.5	8.5	8.5	13.5	13

FUNCTION

Health

SLEEP mode

CH 7-SK technology

ECO-FRESH

CH SMART-ION Filter

Double Self-clean

Self-clean

Comfort management

Locking the remote control

Timer

LED display

Turbo mode

Multi speed fan

SWING mode

Dry mode

Wi-Fi

I FEEL

DIMENSIONS

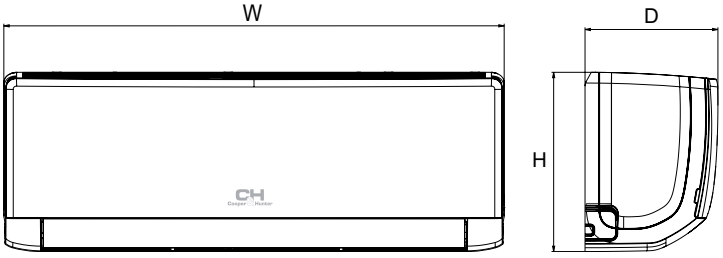

MODEL	W (mm)	H (mm)	D (mm)
CH-S07FTXF-NG (I)	773	250	185
CH-S09FTXF-NG (I)	773	250	185
CH-S12FTXF-NG (I)	773	250	185
CH-S18FTXF-NG (I)	970	300	225
CH-S24FTXK-NG (I)	970	300	225

ALPHA NG SERIES

5 YEARS

20dB

CE RoHS EAC

SPECIFICATION

MODEL			CH-S07FTXE2-NG (I)	CH-S09FTXE-NG (I)	CH-S12FTXE-NG (I)	CH-S18FTXE-NG (I)	CH-S24FTXE2-NG (I)
Продуктивність	Холод	кВт	2.35	2.60	3.50	5.00	7.10
	Тепло	кВт	2.50	2.80	3.60	5.30	7.80
Джерело електроживлення			~220-240 В/50 Гц/1 Ф				
Повітряпродуктивність		м³/год	300/390/420/500	330/430/490/560	290/410/480/560	520/610/720/850	800/850/900/950/1000/1100/1250
Рівень звукового тиску		дБ (А)	20/22/25/29/38	23/26/30/36	24/28/32/37	28/33/39/45	27/29/35/37/39/42/47
Осушення		л/год	0.8	0.8	1.4	1.8	2.4
Вага		кг	8.2	9	9	13.5	16

FUNCTION

Health						Comfort management								
SLEEP mode	CH 7-SK technology	ECO-FRESH	CH SMART-ION Filter	Double Self-clean	Self-clean	Locking the remote control	Timer	LED display	Turbo mode	Multi speed fan	SWING mode	Dry mode	Wi-Fi	I FEEL

DIMENSIONS

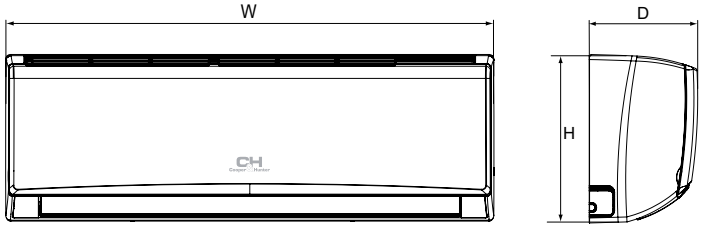

MODEL	W (mm)	H (mm)	D (mm)
CH-S07FTXE2-NG (I)	713	270	195
CH-S09FTXE-NG (I)	790	275	200
CH-S12FTXE-NG (I)	790	275	200
CH-S18FTXE-NG (I)	970	300	225
CH-S24FTXE2-NG (I)	1078	325	246

CONSOLE TYPE

5 YEARS

22dB

CE RoHS EAC

SPECIFICATION

MODEL			CHML-IK09RK	CHML-IK12RK	CHML-IK18RK
Capacity	Cooling	kW	2.70	3.52	5.20
	Heating	kW	2.80	3.75	5.33
Power supply			~220-240V/50Hz/1 Ph		
Air productivity		m^3/h	250/280/330/370/410/430/500	280/360/400/440/480/520/600	320/410/460/520/580/650/700
Sound pressure level		dB (A)	22/25/28/30/32/36/38	24/29/33/36/38/40/44	28/31/35/37/40/45/47
Drainage		l/h	0.8	1.2	1.8
Weight		kg	15.5	15.5	15.5
Liquid line diameter		mm/inch	6.38/1/4"	6.38/1/4"	6.38/1/4"
Gas pipeline diameter		mm/inch	9.53/3/8"	9.53/3/8"	12.7/1/2"

FUNCTION

Health					Comfort management								
SLEEP mode	CH 7-SK technology	ECO-FRESH	CH SMART-ION Filter	Self-clean	Locking the remote control	Timer	LED display	Turbo mode	Multi speed fan	SWING mode	Dry mode	Wi-Fi	I FEEL

DIMENSIONS

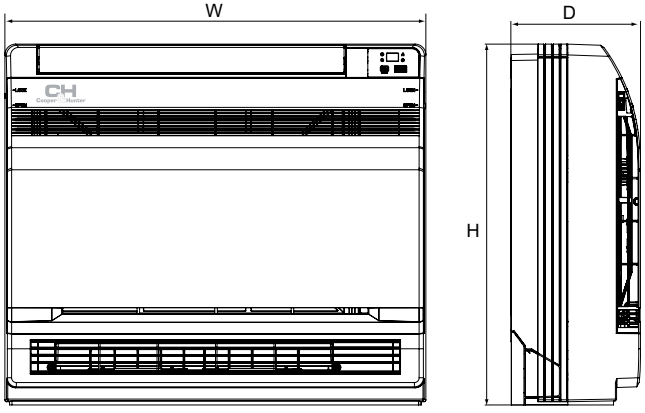

MODEL	W (mm)	H (mm)	D (mm)
CHML-IK09RK	700	600	215
CHML-IK12RK	700	600	215
CHML-IK18RK	700	600	215

CASSETTE TYPE

SPECIFICATION

MODEL			CHML-IC12RK	CHML-IC18RK	CHML-IC24RK
Capacity	Cooling	kW	3.50	4.50	7.10
	Heating	kW	4.0	5.0	8.0
Power supply			~220-240В/50Гц		
Air productivity		m^3/hour	650/560/520/450	710/670/590/450	1280/1220/1100/880
Sound pressure level		dB (A)	44/41/38/34	47/45/41/35	47/45/41/36
Weight		kg	20.0/2.5	20.0/2.5	26.0/5.5
Liquid line diameter		mm/inch	6.38/1/4"	6.38/1/4"	9.53/3/8"
Gas pipeline diameter		mm/inch	9.53/3/8"	12.7/1/2"	15.88/5/8"

FUNCTION

Health	Comfort management	Intelligent control	Technological

SLEEP mode · ECO-FRESH · Timer · LED дисплей · Turbo mode · Multi speed fan · Dry mode · Anti Freeze protection · Auto restart · Self diagnostics · Wired controller connection · Build-in Drine Pump · BLUE-FIN · Silent mide

DIMENSIONS

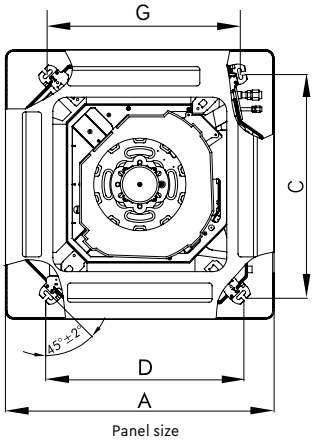

MODEL	A (mm)	B (mm)	C (mm)	D (mm)	E (mm)	F (mm)	G (mm)
"CHML-IC12RK"	670	666	600	496	145	240	596
"CHML-IC18RK"	670	666	600	496	145	240	596
"CHML-IC24RK"	950	840	780	680	145	240	-

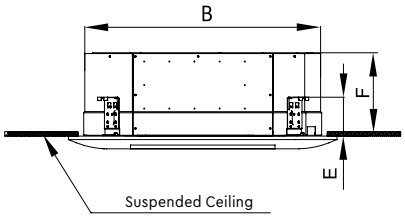

DUCT TYPE

SPECIFICATION

MODEL			CHML- ID09RK	CHML- ID12RK	CHML- ID18RK	CHML- ID21RK	CHML- ID24RK
Capacity	Cooling/Heating	kW	2.5/2.8	3.5/3.85	5.0/5.5	6.0/6.6	7.1/8.0
Air productivity		m^3/hour	450/350/280	550/400/300	700/600/500	1000/750/550	1000/750/550
Sound pressure level		dB (A)	37/34/31/47/41	39/35/32/49/42	41/33/51/43	42/34/52/44	42/34/52/44
Weight		kg	21	22	26	30	30
Liquid line diameter		mm/inch	6.35/1/4"	6.35/1/4"	6.35/1/4"	9.53/3/8"	9.53/3/8"
Gas pipeline diameter		mm/inch	9.53/3/8"	9.53/3/8"	12.7/1/2"	15.88/5/8"	15.88/5/8"

FUNCTION

Health	Comfort management	Intelligent control	Technological

SLEEP mode · ECO-FRESH · Fresh Air mode · Timer · Turbo mode · Multi speed fan · Dry mode · Anti Freeze protection · Auto restart · Self diagnostics · Wired controller connection · Build-in Drine Pump · BLUE-FIN · Silent mide

DIMENSIONS

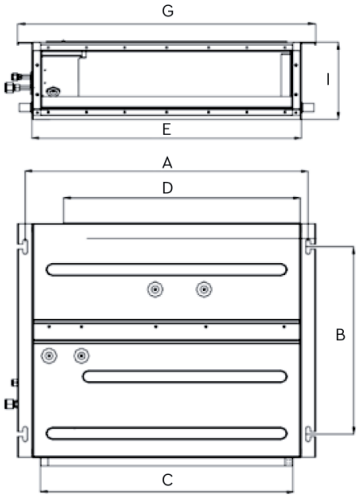

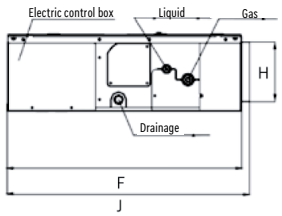

Model	A (mm)	B (mm)	C (mm)	D (mm)	E (mm)	F (mm)	G (mm)	H (mm)	I (mm)	J (mm)
CHML-ID09RK	742	491	662	620	700	615	782	156	200	635
CHML-ID09RK	742	491	662	620	700	615	782	156	200	635
CHML-ID18RK	942	491	862	820	900	615	982	156	200	635
CHML-ID24RK	1142	491	1062	1020	1100	615	1182	156	200	635

OUTDOOR UNIT COMBINATIONS

CHML-U14RK2 | 8 combinations

One unit	Two units	
7	7+7	7+9
9	7+12	9+9
12	9+12	

CHML-U18RK2 | 10 combinations

One unit	Two units		
7	7+7	9+9	12+12
9	7+9	9+12	
12	7+12		

CHML-U21RK3 | 18 combinations

Two units		Three units	
7+7	7+9	7+7+7	7+7+9
7+12	7+18	7+7+12	7+9+9
9+9	9+12	7+9+12	9+9+12
9+18	12+12	9+9+9	
12+18			

CHML-U24RK3 | 23 combinations

Two units		Three units		
7+7	7+9	7+7+7	7+7+9	7+7+12
7+12	7+18	7+7+18	7+9+9	7+9+12
9+9	9+12	7+9+18	7+12+12	9+9+9
9+18	12+12	9+9+12	9+9+18	9+12+12
12+18	18+18	12+12+12		

CHML-U28RK4 | 40 combinations

Two units		Three units			Four Units		
7+7	7+9	7+7+7	7+7+9	7+7+12	7+7+7+7	7+7+7+9	7+7+7+12
7+12	7+18	7+7+18	7+9+9	7+9+12	7+7+7+18	7+7+9+9	7+7+9+12
9+9	9+12	7+9+18	7+12+12	7+12+18	7+7+9+18	7+7+12+12	7+9+9+9
9+18	12+12	9+9+9	9+9+12	9+9+18	7+9+9+12	7+9+12+12	9+9+9+9
12+18	18+18	9+12+12	9+12+18	12+12+12	9+9+9+12	9+9+12+12	
		12+12+18					

CHML-U36RK4 | 96 combinations

Two units		Three units			Four Units		
7+12	7+18	7+7+7	7+7+9	7+7+12	7+7+7+7	7+7+7+9	7+7+7+12
7+21	7+24	7+7+18	7+7+21	7+7+24	7+7+7+18	7+7+7+21	7+7+7+24
9+9	9+12	7+9+9	7+9+12	7+9+18	7+7+9+9	7+7+9+12	7+7+9+18
9+18	9+21	7+9+21	7+9+24	7+12+12	7+7+9+21	7+7+9+24	7+7+12+12
9+24	12+12	7+12+18	7+12+21	7+12+24	7+7+12+18	7+7+12+21	7+7+18+18
12+18	12+21	7+18+18	7+18+21	7+18+24	7+7+12+24	7+9+9+12	7+9+9+18
12+24	18+18	7+21+21	9+9+9	9+9+12	7+9+9+9	7+9+9+24	7+9+12+12
18+21	18+24	7+21+24	9+9+21	9+9+24	7+9+9+21	7+9+12+21	7+9+18+18
21+21	21+24	9+9+18	9+12+18	9+12+21	7+9+12+18	7+12+12+18	9+9+9+9
24+24		9+12+12	9+18+18	9+18+21	7+9+12+24	9+9+9+18	9+9+9+21
		9+12+24	9+21+21	12+12+12	7+12+12+12	9+9+12+12	9+9+12+18
		9+18+24	12+12+21	12+12+24	7+12+12+21	9+9+18+18	9+12+12+12
		9+21+24	12+18+21	18+18+18	9+9+9+12	9+9+12+24	
		12+12+18	12+21+21		9+9+9+24	9+12+12+21	
		12+18+18			9+9+12+21	12+12+12+12	
		12+18+24			9+12+12+18		
					12+12+12+18		

CHML-U42RK4 | 199 combinations

Two units		Three units			Four Units				Five Units			
7+18	7+21	7+7+7	7+7+9	7+7+12	7+7+7+7	7+7+7+9	7+7+7+12	7+7+7+18	7+7+7+7+7	7+7+7+7+9	7+7+7+7+12	7+7+7+7+18
7+24	9+12	7+7+18	7+7+21	7+7+24	7+7+7+21	7+7+7+24	7+7+9+9	7+7+9+12	7+7+7+7+21	7+7+7+7+24	7+7+7+9+9	7+7+7+9+12
9+18	9+21	7+9+9	7+9+12	7+9+18	7+7+9+18	7+7+9+21	7+7+9+24	7+7+12+12	7+7+7+9+18	7+7+7+9+21	7+7+7+9+24	7+7+7+12+12
9+24	12+12	7+9+21	7+9+24	7+12+12	7+7+12+18	7+7+12+21	7+7+12+24	7+7+18+18	7+7+7+12+18	7+7+7+12+21	7+7+7+12+24	7+7+7+18+18
12+18	12+21	7+12+18	7+12+21	7+12+24	7+7+18+21	7+7+18+24	7+7+21+21	7+7+21+24	7+7+7+18+21	7+7+9+9+9	7+7+9+9+12	7+7+9+9+18
12+24	18+18	7+18+18	7+18+21	7+18+24	7+9+9+9	7+9+9+12	7+9+9+18	7+9+9+21	7+7+9+9+21	7+7+9+9+24	7+7+9+12+12	7+7+9+12+18
18+21	18+24	7+21+21	7+21+24	7+24+24	7+9+9+24	7+9+12+12	7+9+12+18	7+9+12+21	7+7+9+12+21	7+7+9+12+24	7+7+9+18+18	7+7+12+12+12
21+21	21+24	9+9+9	9+9+12	9+9+18	7+9+12+24	7+9+18+18	7+9+18+21	7+9+18+24	7+7+12+12+18	7+7+12+12+21	7+7+12+18+18	7+9+9+9+9
24+24		9+9+21	9+9+24	9+12+12	7+9+21+21	7+9+21+24	7+12+12+12	7+12+12+18	7+9+9+9+12	7+9+9+9+18	7+9+9+9+21	7+9+9+9+24
		9+12+18	9+12+21	9+12+24	7+12+12+21	7+12+12+24	7+12+18+18	7+12+18+21	7+9+9+12+12	7+9+9+12+18	7+9+9+12+21	7+9+9+12+24
		9+18+18	9+18+21	9+18+24	7+12+18+24	7+12+21+21	7+18+18+18	9+9+9+9	7+9+9+18+18	7+9+12+12+12	7+9+12+12+18	7+9+12+12+21
		9+21+21	9+21+24	9+24+24	9+9+9+12	9+9+9+18	9+9+9+21	9+9+9+24	7+12+12+12+12	7+12+12+12+18	9+9+9+9+9	9+9+9+9+12
		12+12+12	12+12+18	12+12+21	9+9+12+12	9+9+12+18	9+9+12+21	9+9+12+24	9+9+9+9+18	9+9+9+9+21	9+9+9+9+24	9+9+9+12+12
		12+12+24	12+18+18	12+18+21	9+9+18+18	9+9+18+21	9+9+18+24	9+9+21+21	9+9+9+12+18	9+9+9+12+21	9+9+9+18+18	9+9+12+12+12
		12+18+24	12+21+21	12+21+24	9+9+21+24	9+12+12+18	9+12+12+21	9+12+12+24	9+9+12+12+18	9+9+12+12+21	9+12+12+12+12	9+12+12+12+18
		12+24+24	18+18+18	18+18+21	9+12+12+12	9+12+18+21	9+12+21+21	9+18+18+18	12+12+12+12+12	9+9+9+12+24		
		18+18+24	18+21+21	21+21+21	9+12+18+18	12+12+12+18	12+12+12+21	12+12+12+24				
		18+21+24			9+12+18+24	12+12+18+21						
					12+12+12+12							
					12+12+18+18							

DESIGNATION

Certificates

- CE certificate
- RoHS certificate
- EAC certificate

Health

- **SLEEP mode.** SLEEP comfortable sleep mode
- **CH 7-SKY technology.** Unique CH 7-SKY technology – seven stages of air purification
- **Plasma air purifier.** Premium Plasma Air Purifier – a unique system that cleans from bacteria, viruses, odors and allergens
- **ESO-FRESH.** Electrostatic air cleaning filter ESO-FRESH
- **CH SMART-ION Filter.** CH SMART-ION Filter – a technology of total air purification, a new generation
- **Self-clean** The air conditioner will continue to blow dry the indoor unit for a few minutes, even if you switch off the unit from the control panel.
- **Double Self-clean**

Intelligent control

- **Frost protection system.** Intelligent frost protection system
- **Autostart function.** Autostart function is an automatic restart function with memorization of settings
- **Wired remote control.** Ability to connect a wired remote control
- **Self-diagnostics.** Self-diagnostics of malfunctions of the main units and modes
- **Display backlight.** Indoor unit backlight (display)
- **BMS connection.** Ability to connect to the BMS system
- **Intelligent sensor**

Comfort management

- **Locking the remote control**
- **Timer**
- **LED display.** LED display on the indoor unit panel
- **Autolight**
- **Turbo mode**
- **Multi-speed fan**
- **SWING mode.** Wide-angle blinds, create coverage of the entire volume of the room in the mode of automatic air distribution SWING
- **Work in drainage mode**
- **Step-less.** Fan Control Step-less Fan Control – a unique technology for smooth control of the fan speed of the indoor unit in a wide range from 1 to 100%
- **Self-clean**
- **Wi-Fi.** Wi-Fi module for air conditioning control via Smartphone / Tablet (OS: Android, iOS)
- **I FEEL I FEEL** – the controller automatically regulates temperature, according to the temperature sensor on the remote control

Technological

- **Refrigerant type R32**
- **Refrigerant type R10A**
- **Refrigerant type R290**
- **Two-stage compressor**
- **Silent mode.** Silent operation of indoor and outdoor units
- **Auto-protection**
- **8°C function.** The +8°C function provides automatic switching on of the air conditioner in the heating mode, in case of decrease in temperature in the room to 8 ° C
- **I-Action technology.** Inverter technology
- **BLUE-FIN anti-corrosion coating.** Heating exchangers with GREEN-FIN anti-corrosion coating
- **Warm start**
- **Work in a multi-zone system**
- **EVI-scroll technology**

Energy efficiency

- **Energy efficiency class A +++**
- **Energy efficiency class A ++**
- **Energy efficiency class A**
- **Generation of energy-saving equipment V**
- **Generation of energy-saving equipment VI**

* Cooper&Hunter is constantly working to improve their products, so the information in this manual is subject to change without prior notice.